MITSUBISHI HEAVY INDUSTRIES

MOVE THE WORLD FORWARD MITSUBISHI HEAVY INDUSTRIES GROUP

VRF inverter multi-system Air Conditioners

High Performance Air Conditioning

2023

KXZ2

The Mitsubishi Heavy Industries Thermal Systems KXZ VRF series delivers high performance in cooling and heating for all commercial applications. It offers the highest level of design flexibility, improved efficiency as well as enhanced operational functions.

Line Up

Contents

Introduction	4~33
Outdoor units	34~71
Micro KXZ	34~39
KXZ Lite	40·41
KXZ Standard Series	42~51
KXZ Heat Recovery System	52~65
Water cooled Series	66·67
Indoor units	72~121
EEV-KIT	122·123
Control systems	124~135
Energy efficient and environmentally conscious	136

KXZ system is the best air conditioning solution for "Sophisticated" buildings

KXZ VRF series delivers high cooling/heating performance for all commercial applications.

High efficiency & comfort	• High energy efficiency with advanced technology • Energy saving control by VTCC (Variable Temperature & Capacity Control) • Individual, centralised and customised comfort control
Design flexibility	• Various types of indoor units suiting all applications • Long piping length and wide limitation of piping • Easy selection and design software
Easy & customised control	• Individual advanced control by wired and wireless remote controller • Various options for BMS & centralised controller
Good serviceability	• Easy access for maintenance • Engineering and monitoring tool available

“Micro KXZ series” for small offices, shops and residential applications

Energy efficient and highly reliable industry leading compact units are designed and built by our technology experts.

Heat pump systems

The heat pump systems operate with 2 inter-connecting pipes, and are commonly referred to as a '2-pipe systems'.

These systems provide either a heating or cooling operation to all indoor units at the same time and are suitable for a wide range of applications from an apartment or villa to an entire multi-story building, especially when there are significant open plan areas to be controlled.

The range starts with a 12.1kW cooling capacity, up to 20HP with 56.0kW cooling capacity. Outdoor units can also be “twinned” or “tripled” providing up to 60HP/168.0kW on a single system.

The range has a total piping length of 1000m (KXZ) and the furthest indoor unit can be connected up to 160m (KXZ) from the outdoor unit.

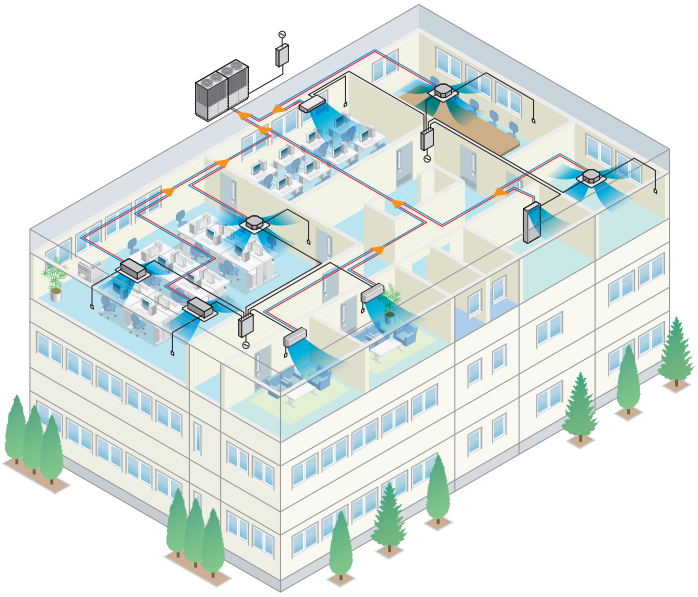

Specific cases of VRF system installation from Mitsubishi Heavy Industries Thermal Systems

Case study: Hotel and Leisure

The VRF heat recovery systems from Mitsubishi Heavy Industries (MHI) Thermal Systems KX range match the demanding needs and specifications for luxury hotels and 'airport style' bus stations. MHI Thermal VRF systems feature advanced inverter technology that adjusts compressor output to match the cooling or heating demands of the indoor units. Allowing to save energy and easily control room temperature by choosing to heat or cool in different areas. Our adaptable system allows to increase the heat in sunnier, south facing rooms; all while providing energy for rooms in cooler, shadier sides of your building.

Case study: Education

We're proud to have provided Crossways Academy in Lewisham with a VRF system with inverter control - helping to make school a cooler place to learn.

Comfortable temperatures need to be maintained as economically as possible in rooms where large numbers of students will enter or leave at the same time. IT equipment being switched on and off and the use of electric blinds to control glare will all contribute to substantial fluctuations in heat load. A VRF KX system from Mitsubishi Heavy Industries Thermal Systems provides an ideal solution. Much of the building was designed to rely on natural ventilation, with windows operated electronically. The air conditioning system is linked to this control system to close down when windows are opened. Mitsubishi Heavy Industries Thermal Systems KX is particularly appropriate for many such retrofit applications.

Product Line Up
Outdoor units

Capacity Range	4HP	5HP	6HP	8HP	10HP	12HP	14HP	16HP	17HP	18HP	20HP
Model Code : kW	12.1	14	15.5	22.4	28	33.5	40.0	45.0	47.5	50.0	56.0
BTU / h	41,300	47,800	52,900	76,400	95,500	114,300	136,500	153,500	162,100	170,600	191,100
Micro KXZ (4~6HP) R32	←		→								
Micro KXZ (4~6HP) R410A	←		→								
Micro KXZ (8~12HP) R410A				←		→					
KXZ Lite R410A				←		→					
Standard model KXZE2 R410A					←						
Hi-COP combination KXZXE2 R410A										↔	
Heat recovery system KXZRE2 R410A				←							
Heat recovery system Hi-COP KXZRXE2 R410A								↔		←	

Micro KXZ R32 NEW

12.1kW	14.0kW	15.5kW
4HP	5HP	6HP
FDC121KXZEN1-W	FDC140KXZEN1-W	FDC155KXZEN1-W
FDC121KXZES1-W	FDC140KXZES1-W	FDC155KXZES1-W

Micro KXZ

12.1kW	14.0kW	15.5kW
4HP	5HP	6HP
FDC121KXZEN1	FDC140KXZEN1	FDC155KXZEN1
FDC121KXZES1	FDC140KXZES1	FDC155KXZES1

Micro KXZ

22.4kW	28.0kW	33.5kW
8HP	10HP	12HP
FDC224KXZME1	FDC280KXZME1	FDC335KXZME1A

KXZ Lite

22.4kW	28.0kW
8HP	10HP
FDC224KXZPE1	FDC280KXZPE1

Standard model KXZE2 NEW

FDC280, 335

FDC400-560

28.0kW	33.5kW	40.0kW	45.0kW	47.5kW	50.0kW	56.0kW
10HP	12HP	14HP	16HP	17HP	18HP	20HP
FDC280KXZE2	FDC335KXZE2	FDC400KXZE2	FDC450KXZE2	FDC475KXZE2	FDC500KXZE2	FDC560KXZE2

FDC615, 670

FDC735

FDC800-1120

61.5kW	67.0kW	73.5kW	80.0kW	85.0kW	90.0kW	95.0kW	100.0kW	106.0kW	112.0kW
22HP	24HP	26HP	28HP	30HP	32HP	34HP	36HP	38HP	40HP
FDC615KXZE2	FDC670KXZE2	FDC735KXZE2	FDC800KXZE2	FDC850KXZE2	FDC900KXZE2	FDC950KXZE2	FDC1000KXZE2	FDC1060KXZE2	FDC1120KXZE2
FDC280KXZE2	FDC335KXZE2	FDC335KXZE2	FDC400KXZE2	FDC400KXZE2	FDC450KXZE2	FDC475KXZE2	FDC500KXZE2	FDC500KXZE2	FDC560KXZE2
FDC335KXZE2	FDC335KXZE2	FDC400KXZE2	FDC400KXZE2	FDC450KXZE2	FDC450KXZE2	FDC475KXZE2	FDC500KXZE2	FDC560KXZE2	FDC560KXZE2

*For Heat recovery system please refer to P53

22HP	24HP	26HP	28HP	30HP	32HP	34HP	36HP	38HP	40HP	42HP	44HP	46HP	48HP	50HP	52HP	54HP	56HP	58HP	60HP
61.5	67.0	73.5	80.0	85.0	90.0	95.0	100.0	106.0	112.0	120.0	125.0	130.0	135.0	142.5	145.0	150.0	156.0	162.0	168.0
209,800	228,600	250,800	273,000	290,000	307,100	324,100	341,200	361,700	382,100	409,400	426,500	443,600	460,600	486,200	494,700	511,800	532,200	552,700	573,200

Standard model KXZE2 NEW

FDC1200-1680

120.0kW	125.0kW	130.0kW	135.0kW	142.5kW	145.0kW	150.0kW	156.0kW	162.0kW	168.0kW
42HP	44HP	46HP	48HP	50HP	52HP	54HP	56HP	58HP	60HP
FDC1200KXZE2	FDC1250KXZE2	FDC1300KXZE2	FDC1350KXZE2	FDC1425KXZE2	FDC1450KXZE2	FDC1500KXZE2	FDC1560KXZE2	FDC1620KXZE2	FDC1680KXZE2
FDC400KXZE2	FDC400KXZE2	FDC400KXZE2	FDC450KXZE2	FDC475KXZE2	FDC475KXZE2	FDC500KXZE2	FDC500KXZE2	FDC500KXZE2	FDC560KXZE2
FDC400KXZE2	FDC400KXZE2	FDC450KXZE2	FDC450KXZE2	FDC475KXZE2	FDC475KXZE2	FDC500KXZE2	FDC500KXZE2	FDC560KXZE2	FDC560KXZE2
FDC400KXZE2	FDC450KXZE2	FDC450KXZE2	FDC450KXZE2	FDC475KXZE2	FDC500KXZE2	FDC500KXZE2	FDC560KXZE2	FDC560KXZE2	FDC560KXZE2

Hi-COP combination KXZXE2 NEW

FDC560

56.0kW
20HP
FDC560KXZXE2
FDC280KXZE2
FDC280KXZE2

FDC850-1000

FDC1060

FDC1120

85.0kW	90.0kW	95.0kW	100.0kW	106.0kW	112.0kW
30HP	32HP	34HP	36HP	38HP	40HP
FDC850KXZXE2	FDC900KXZXE2	FDC950KXZXE2	FDC1000KXZXE2	FDC1060KXZXE2	FDC1120KXZXE2
FDC280KXZE2	FDC280KXZE2	FDC280KXZE2	FDC335KXZE2	FDC335KXZE2	FDC335KXZE2
FDC280KXZE2	FDC280KXZE2	FDC335KXZE2	FDC335KXZE2	FDC335KXZE2	FDC400KXZE2
FDC280KXZE2	FDC335KXZE2	FDC335KXZE2	FDC335KXZE2	FDC400KXZE2	FDC400KXZE2

Indoor units

18 types of exposed or concealed indoor units available in a wide range of capacities. The best solution of indoor units for all applications is available from our full lineup.

		1.5kW <0.5HP>	2.2kW <0.8HP>	2.8kW <1HP>	3.6kW <1.25HP>
Ceiling Cassette	4way FDT NEW			FDT28KXZE1-W	FDT36KXZE1-W
				FDT28KXZE1	FDT36KXZE1
	4way Compact FDTC NEW	FDTC15KXZE1-W	FDTC22KXZE1-W	FDTC28KXZE1-W	FDTC36KXZE1-W
		FDTC15KXZE1	FDTC22KXZE1	FDTC28KXZE1	FDTC36KXZE1
	2way FDTW			FDTW28KXE6F	
	1way FDTS				
	1way Compact FDTQ		FDTQ22KXE6F	FDTQ28KXE6F	FDTQ36KXE6F
Duct Connected	High Static Pressure FDU				
	Low/Middle Static Pressure FDUM NEW		FDUM22KXE6F-W	FDUM28KXE6F-W	FDUM36KXE6F-W
			FDUM22KXE6F	FDUM28KXE6F	FDUM36KXE6F
	Low Static Pressure(thin) FDUT NEW	FDUT15KXE6F-W	FDUT22KXE6F-W	FDUT28KXE6F-W	FDUT36KXE6F-W
		FDUT15KXE6F-E	FDUT22KXE6F-E	FDUT28KXE6F-E	FDUT36KXE6F-E
	Compact & Flexible FDUH		FDUH22KXE6F	FDUH28KXE6F	FDUH36KXE6F
Wall Mounted FDK NEW		FDK15KXZE1-W	FDK22KXZE1-W	FDK28KXZE1-W	FDK36KXZE1-W
		FDK15KXZE1	FDK22KXZE1	FDK28KXZE1	FDK36KXZE1
Ceiling Suspended FDE					FDE36KXZE1
Floor Standing	2way FDFW			FDFW28KXE6F	
	With Casing FDFL				
	Without Casing FDFU			FDFU28KXE6F	
OA Processing unit FDU-F		FDU-F series is not connectable to the Micro model (4~6HP), KXZ Lite.			
Hydro Module unit HMU NEW					
	Air flow m^3/h	150	250	350	500
Fresh Air Assembly SAF-DX			SAF-DX250E6	SAF-DX350E6	SAF-DX500E6
Fresh Air Ventillation and Heat Exchange unit SAF		SAF150E7	SAF250E7	SAF350E7	SAF500E7

*R32 indoor unit are not compatible with R410A outdoor unit and vice versa.

	4.5kW <1.6HP>	5.6kW <2HP>	7.1kW <2.5HP>	9.0kW <3.2HP>	11.2kW <4HP>	14.0kW <5HP>	16.0kW <6HP>	22.4kW <8HP>	28.0kW <10HP>
	FDT45KXZE1-W	FDT56KXZE1-W	FDT71KXZE1-W	FDT90KXZE1-W	FDT112KXZE1-W	FDT140KXZE1-W	FDT160KXZE1-W		
	FDT45KXZE1	FDT56KXZE1	FDT71KXZE1	FDT90KXZE1	FDT112KXZE1	FDT140KXZE1	FDT160KXZE1		
	FDTC45KXZE1-W	FDTC56KXZE1-W							
	FDTC45KXZE1	FDTC56KXZE1							
	FDTW45KXE6F	FDTW56KXE6F	FDTW71KXE6F	FDTW90KXE6F	FDTW112KXE6F	FDTW140KXE6F			
	FDTS45KXE6F		FDTS71KXE6F						
	FDU45KXE6F-W	FDU56KXE6F-W	FDU71KXE6F-W	FDU90KXE6F-W	FDU112KXE6F-W	FDU140KXE6F-W	FDU160KXE6F-W		
	FDU45KXE6F	FDU56KXE6F	FDU71KXE6F	FDU90KXE6F	FDU112KXE6F	FDU140KXE6F	FDU160KXE6F	FDU224KXZE1	FDU280KXZE1
	FDUM45KXE6F-W	FDUM56KXE6F-W	FDUM71KXE6F-W	FDUM90KXE6F-W	FDUM112KXE6F-W	FDUM140KXE6F-W	FDUM160KXE6F-W		
	FDUM45KXE6F	FDUM56KXE6F	FDUM71KXE6F	FDUM90KXE6F	FDUM112KXE6F	FDUM140KXE6F	FDUM160KXE6F		
	FDUT45KXE6F-W	FDUT56KXE6F-W	FDUT71KXE6F-W						
	FDUT45KXE6F-E	FDUT56KXE6F-E	FDUT71KXE6F-E						
	FDK45KXZE1-W	FDK56KXZE1-W	FDK71KXZE1-W	FDK90KXZE1-W					
	FDK45KXZE1	FDK56KXZE1	FDK71KXZE1	FDK90KXZE1					
	FDE45KXZE1	FDE56KXZE1	FDE71KXZE1		FDE112KXZE1	FDE140KXZE1			
	FDFW45KXE6F	FDFW56KXE6F							
			FDFL71KXE6F						
	FDFU45KXE6F	FDFU56KXE6F	FDFU71KXE6F						
				FDU650FKXZE1		FDU1100FKXZE1		FDU1800FKXZE1	FDU2400FKXZE1
						HMU140KXZE1			HMU280KXZE1
		800	1000						
		SAF-DX800E6	SAF-DX1000E6						
		SAF800E7	SAF1000E7						

Next Generation Refrigerant R32

New indoor units and outdoor units line up are available for R32 refrigerant

F-GAS REGULATION (EU) No 517/2014

Introduced in January 2015 to regulate the use of Fluorinated Greenhouse Gases (F-Gases)

The Hydrofluorocarbons (HFCs) are F-Gases used in the HVACR sector (Heating, Ventilation, Air Conditioning and Refrigeration)

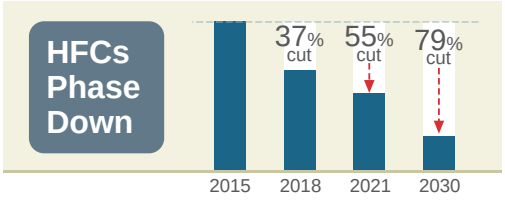

OBJECTIVE	IMPACT ON HFCs(in EU)	SOLUTIONS
To protect the environment by reducing the F-Gases emissions	HFCs Phase Down HFCs Ban	•Use lower GWP* refrigerants in new equipment •Use high-efficiency equipment with less refrigerant charge •Check refrigerant leaks regularly

* GWP is the Global Warming Potential of a refrigerant, representing how much heat an F-Gas traps in the atmosphere

HFCs Ban

2020

GWP ≥ 150
Portable room air conditioner

GWP ≥ 2500
Stationary refrigeration*1 (except < -50°C)

GWP ≥ 2500
Commercial hermetically sealed refrigerators, freezers

2022

GWP ≥ 150
Commercial multipack centralised refrigeration

GWP ≥ 150
Commercial hermetically sealed refrigerators, freezers

2025

GWP ≥ 750
Single Split Fixed Air Conditioning < 3kg HFC

*1 Stationary refrigeration equipment, that contains or relies its functions upon, HFCs with GWP of 2500 or more except equipment intended for application designed to cool products to temperatures below -50℃ application

LOWER GWP + LESS REFRIGERANT CHARGE = LOWER HFCs EMISSIONS

R32 - A Low GWP Refrigerant

- A single component, easy to handle refrigerant
- Known as a component of the blend R410A(50% R32, 50% R125)
- Already used in Air Conditioning systems worldwide
- Zero Ozone Depletion
- Superior Energy Efficiency vs. R410A
- Reduced refrigerant charge vs. R410A
- Easy to recycle

Micro KXZ Heat pump systems
4, 5, 6HP (12.1kW ~ 15.5kW)

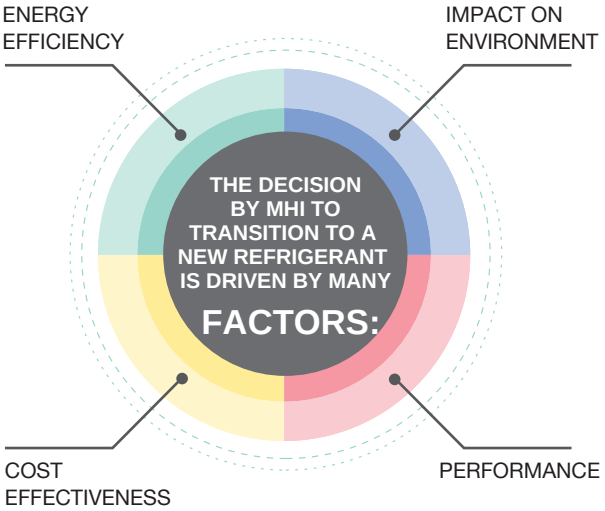

Low Global Warming Potential

1/3 GWP VS. R410A

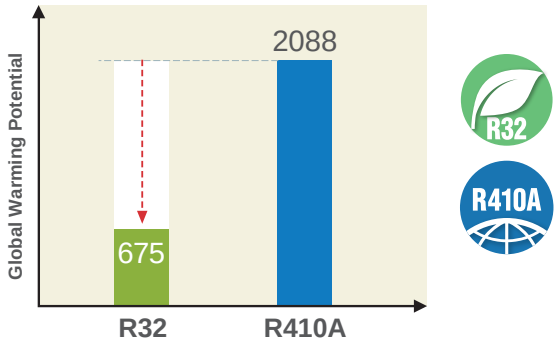

GWP Values based on IPCC 4th Assessment Report

Improved Energy Efficiency

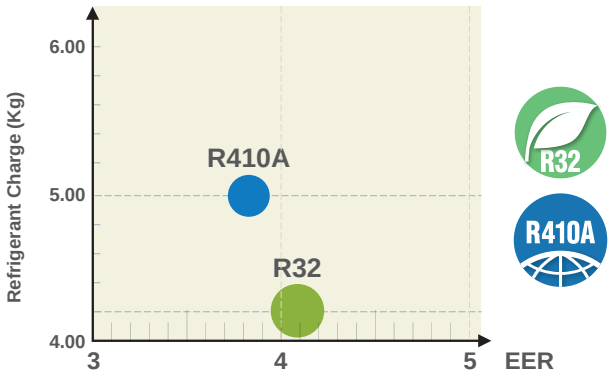

Energy Efficiency Ratio Based on 12.1kW MicroKXZ Outdoor unit.

Reduced Refrigerant Charge

Saving up to 16%

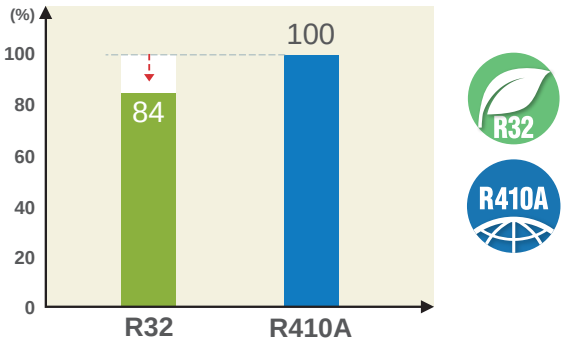

New Generation

New Design

The new KXZ2 series has a layered design and a refined new form. The flexibility in design and ease of installation are further enhanced to provide optimum response to medium and large building airconditioning systems.

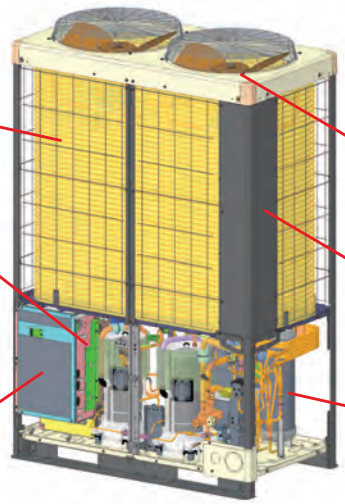

Highly efficient Heat exchanger

Optimised duct shape

New inverter control

DC fan motor

Rounded design

Newly developed compressor

The newly developed compressor has improved the units efficiency by innovating the thrust plate. Resulting a reduced friction loss, and increased realiability.

Indoor Unit Capacity Connection

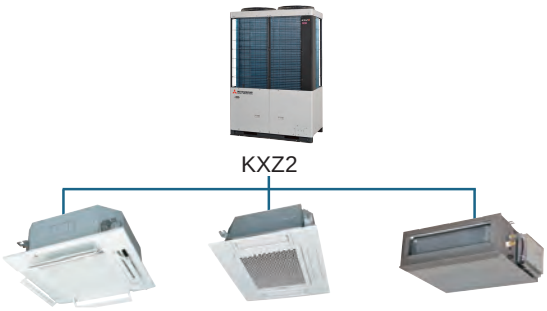

Increased number of connectable units and max capacity connection (compared to KXZE1)

Connectable indoor units														
HP	10	12	14	16	17	18	20	22	24	26	28	30	32	34
Numbers	**37**	**44**	**53**	**60**	**50**	**53**	**59**	**65**	**71**	**78**	**80**	**80**	**80**	80
HP	36	38	40	42	44	46	48	50	52	54	56	58	60	
Numbers	80	80	80	80	80	80	80	80	80	80	80	80	80	

Long Pipe Length

The maximum height difference between indoor units has been increased to a maximum of 30m, and the maximum height difference between the outdoor unit and indoor unit has been expanded to 90m. For with few limitations, contributes to system design flexibility.

*1 The difference between the longest and the shortest indoor unit piping from the first branch must be within 40m. (MAX85m)
*2 It is necessary to change the setting corresponding to each height difference in installation. The range of use is also different.

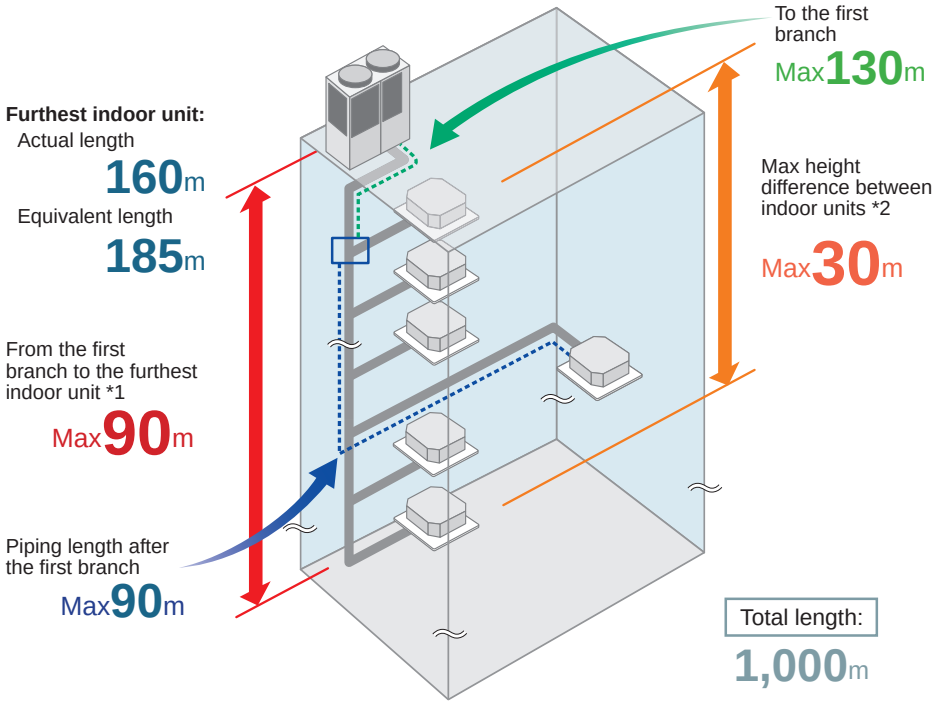

Technology

Continuous Heating Capacity Control (CHCC)

Our CHCC defrosting control has been added to our KXZ2 system and allows to achieve greater capacities than that of our previous model in low ambient temperature conditions. CHCC controls the target pressure automatically before the capacity drops, which increases the period of heating operation and reduces the systems defrosting time.

Variable Temperature and Capacity Control

VTCC adjusts the target pressure of the refrigerant cycle in the outdoor unit automatically according to the demand of the indoor units in partial load conditions. These smooth adjustments ensure optimal usage of the indoor units as well as maximised energy savings. Ultimately this also increases comfort for the user.

VTCC

*34% energy savings are based on comparison with a KXZ standard model with VTCC vs. a KXZ standard model both under partial load condition.

Extended external static pressure

50Pa to Max 85Pa

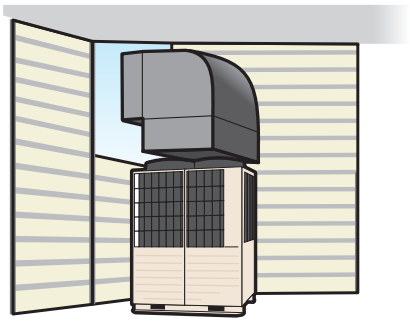

Flexibility to meet installation location needs.

New Generation FDTC

European design & Flat panel

Ceiling Cassette
Compact

FDTC

- More comfort and Higher energy savings
- New European Design
- Lower noise

A' Design Award and Competition is the World's largest, most prestigious and influential design accolade, the highest achievement in design. A' Design Award Winner Logo, symbolizes exceptional design excellence in products, projects and services.

Thin Panel
FDTC thin panel fit within 10mm from the ceiling.

Unique Grille Design
Honeycomb grille

Draft Prevension Panel (Option)
Please refer to page 18

Motion Sensor (Option)
Please refer to page 16-17

Big Louver
Improved distribution

• It is available to set draft prevention panel and motion sensor as well as FDT.

Compact Design

□700mm → □620mm

The weight is 14kg

Height of thin panel and main body is 248mm allowing adequate spacing for installation.

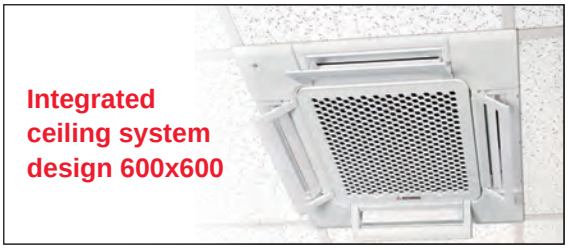

Quieter operation

Adopting new turbo fan and improving new heat exchanger enables noise reduction. (Sound pressure level in the Lo mode.)

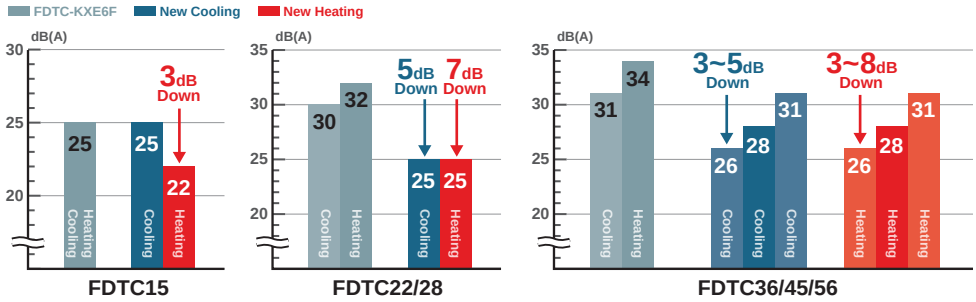

FDT colour variation

Now available in shadow black

Blend in, *or stand out*.

Shadow black

Fine snow white

Motion sensor (Option)

Energy saving operation by detecting human movement

Optional for the following models

FDT | FDTC | FDTW | FDTS | FDU | FDUM | FDUT(71only) | FDE | FDK | FDU-F

NEW

FDTQ | FDUT(15~56) | FDFL | FDFU

3 Step Control

1 Power Control

New motion sensor (option) detects human activity. Energy saving control is achieved by shifting set temperature according to detected amount of activity.

2 Stand by

Unit will go on stand-by mode when no activity is detected. When the motion sensor detects activity again, the unit will automatically re-start operation.

3 Auto Off

Unit will go off automatically when no activity is detected for 12 hours.

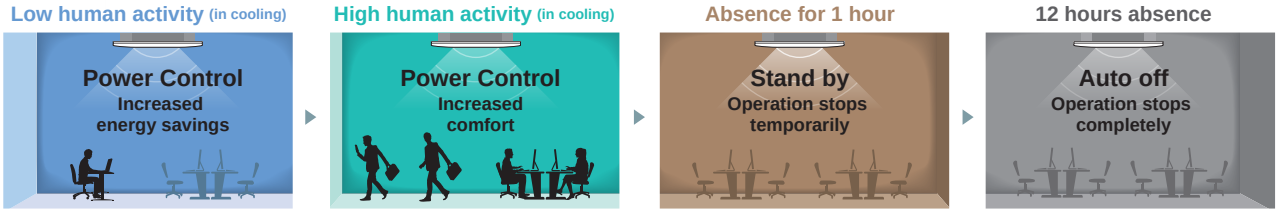

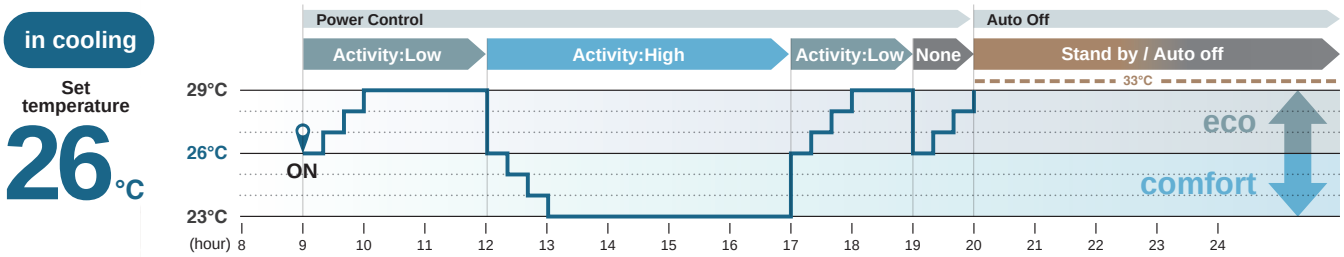

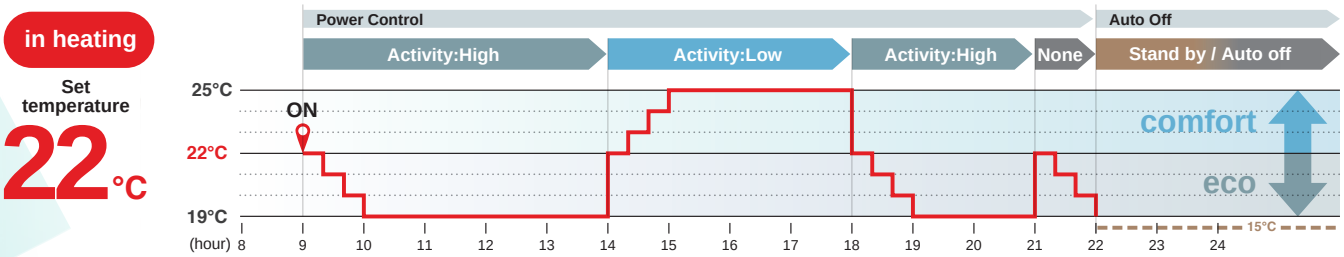

Operation mode and Control of Motion sensor

eco operation | comfort operation

			Operation mode				
			Auto	Cool	Heat	Dry	Fan
Power Control *1	Human activity	Low	Cooling +3°C Heating +3°C	+3°C	+3°C	-	-
		High	Cooling -3°C Heating -3°C	-3°C	-3°C	-	-
		None	Cooling +3°C Heating -3°C	+3°C	-3°C	-	-
Auto Off *2			●	●	●	●	●

*1 Set temperature is revised maximum ± 3℃ at Cooling/Heating mode by detecting heat volume movement.

*2 Absence for 1 hour ⇒ Operation stops ("Stand-by") 12 hours absence ⇒ Operation stops completely

Draft Prevention Panel (Option)

Keep maximum comfort with minimal draft : FDT & FDTC control flaps with more flexibility.

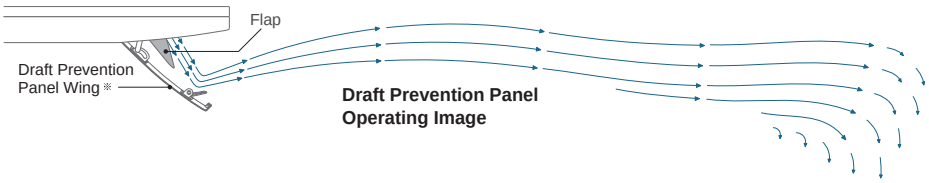

- New flexible function in the market
- Flexible flap control for draft prevention

Each of the 4 flaps can be controlled individually at each operation mode. They change air flow direction and prevent drafts occurring. This function also provides flexible control for air flow direction.
User can position Draft Prevention Panel panels by using only the remote controller (RC-EX3A, Wireless kit).

• It can also prevent user from being directly blown by hot drafts in heating mode.

Draft Prevention Panel off

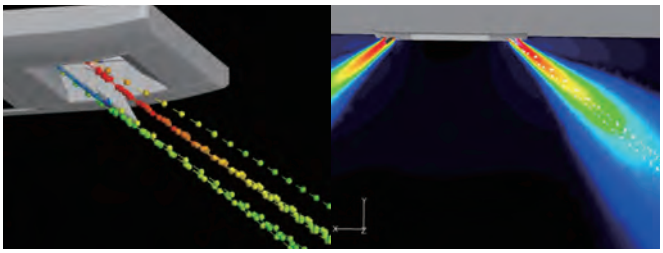

Draft Prevention Panel working*

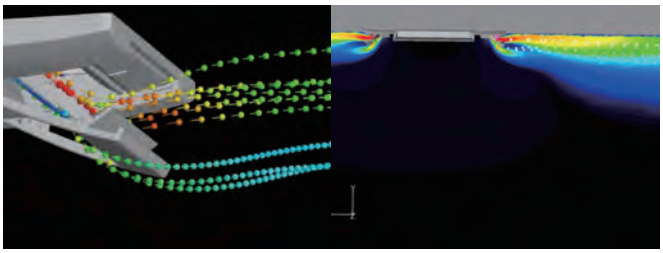

Draft Prevention Panel provides a comfortable airflow without any draft feeling. Whether cooling or heating a room, the remote control can be used to instantly suppress any warm or cool drafts. This accurately assists how air flow is directed out of the indoor unit.

* Image is for illustration purposes

Ceiling cassette

FDT

The Good Design Award is Japan's only comprehensive design evaluation and recommendation initiative, originating with the "Good Design Products Selection System" founded in 1957.
It is now a global design award with participation from numerous Japanese and international companies and organizations. The "G Mark", the symbol of the Good Design Award, is known widely as a symbol of excellent design. (FDT)

Remote Control

Simple use with advanced settings REMOTE CONTROL

RC-EX3A

Intuitive touch controller with Liquid Crystal Display

Function Switch

The function switch allows you to select and set two functions of your choice among the seven available functions shown.
These functions can be used by simply pressing the button after they are set, allowing you to use your preferable functions immediately.

1. Draft prevention ON/OFF

Anti draft can be turned ON/OFF with a single tap of the button.

2. High Power Mode

High Power Mode achieve excessive cooling / heating capacity in 15 minutes to quickly adjust the room temperature to a comfortable level.

3. Energy Saving Mode

Temperature is set to be optimized to save energy without losing comfort.

4. Quiet Mode

Outdoor unit starts to operate quietly by activating this mode. The time of this mode can be set in conjunction with Indoor Silent Timer.

5. Home Leave Mode

Home leave mode maintains the room temperature at a moderate level.

6. Favourite Mode

Operation mode, set temperature, fan speed and air flow direction will automatically be adjusted to the programmed favorite setting.

7. Filter Sign

Announces the due time for cleaning the air filter.

Favourite Mode

Operation mode, set temperature, fan speed and air flow direction are memorized and allocated to two buttons that can be operated by one touch.

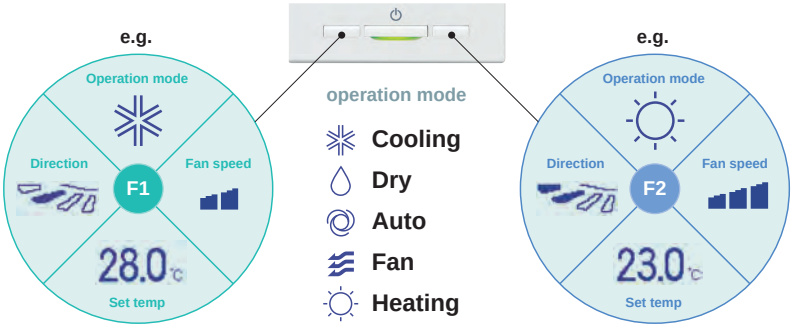

Adjustable Brightness of the Operation Lamp

The brightness of the operation lamp behind Run/Stop switch can be adjusted by 10 stages.

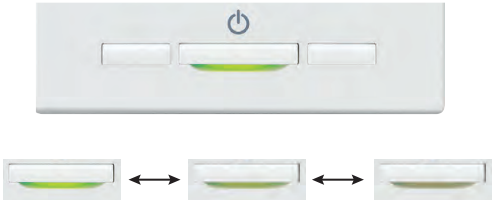

Draft Prevention Setting

(only for FDT•FDTC series)

User can enable/disable the motion of Draft prevention panel for each blow outlet for each operation mode. This function can be set while operating.

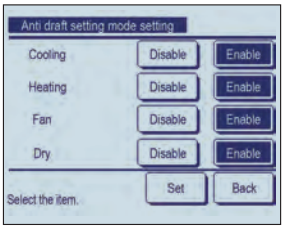

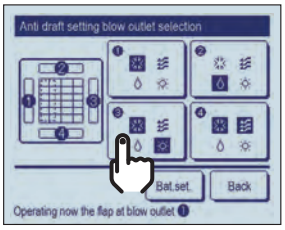

Easy Adjustment of the Air Flow

User can visually confirm and set the direction of flaps using the visual display on the remote controller.

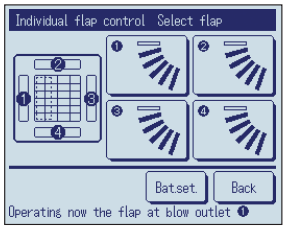

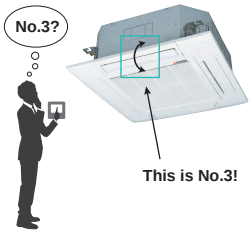

Motion Sensor Control

Presence of humans and activity are detected by a motion sensor to perform various controls.

1 Select Enable / Disable
Motion sensor control

Enable/Disable

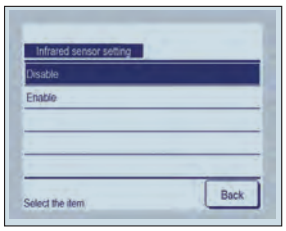

Select Enable / Disable for the motion sensor of the indoor unit connected to the R/C.

2 Select Enable / Disable per control

- **Power control**
- **Auto-off**

Enable/Disable

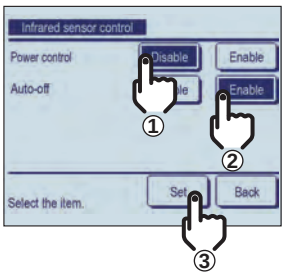

Backup Control

Control restricted to two indoor units (two groups)

Fault backup control

Reassurance Comfort

Keep back up all the time!

If one of the two indoor units malfunctions and stops its operation, the other starts backup operation so that users' comfort will not be compromised.

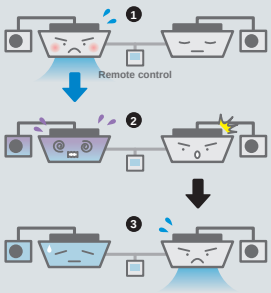

Capacity backup control

Comfort Energy saving Longer unit life

Maintains users' comfort!

When the control system detects either of its two units operating with overload, the other unit cover the capacity.

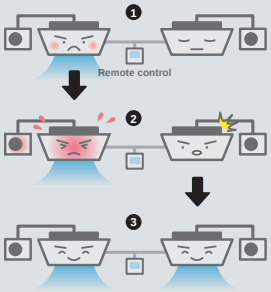

Rotational operation control

Longer unit life Energy saving

Energy saving and longer life!

By operating two indoor units alternately, their chronological changes are equalized. (The alternate operation cycle can be specified in a range from 1 to 999 hours in increments of 1 hours.)

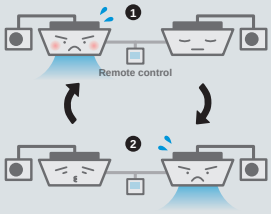

Additional functions of External Input / Output

The external input/output of indoor unit by remote controller can set input/output based on user's demand.

Remote surveillance system

Card key on-off

External Input

CNT (1-6) CNTA (1-2)	
Input	On/Off Permission/Prohibition Cooling/Heating Emergency Stop
Newly added	Set temp. shift Forced thermo-off IU operation stop Silent mode

External Output

CNT (New)		
2	Output	- Operation - Heating - Compressor ON (thermo-ON)
3	Output	- Inspection
4	Output	
5	Output	
Newly added		- Cooling (defrosting) - Fan operation - Fan operation with Phi or Hi - Fan operation with Me or Lo - Defrosting (oil return in heating operation) - Ventilation - Heater ON - Free cooling - IU overload alarm

Silent mode control

The Outdoor unit is controlled prioritising quiet operation. Silent mode control must be set to the F1 or F2 switch. User can start/stop the silent mode control with a single tap of a button.

Indoor unit capacity display

Capacities of Indoor units connected to the RC-EX3A are displayed.

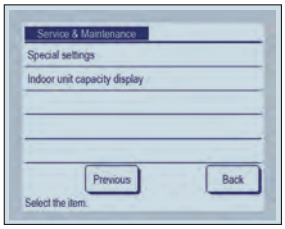

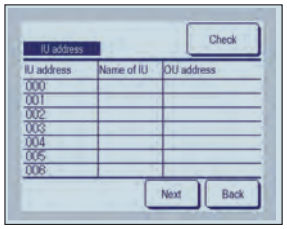

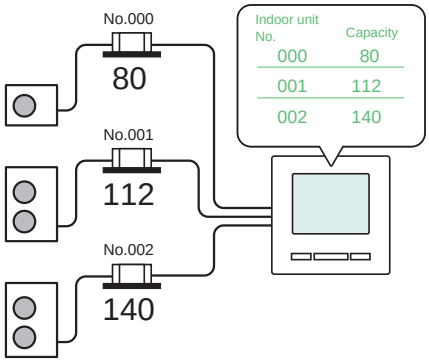

Language Switching

User can select from the following languages and also switch them on the top display.

Error display

If any error occurs with the air conditioner, the "Unit protection stop" is indicated on the message display.

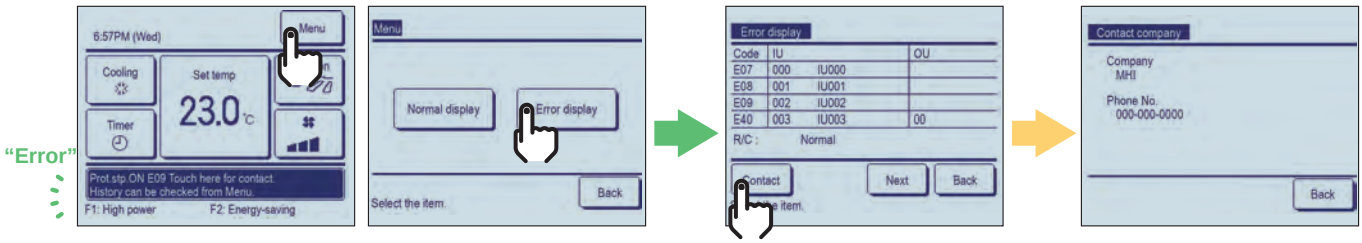

Serviceability & workability (Indoor unit)

Easy and quick installation and maintenance

Indoor unit is easily positioned and installed

1 Adjustable easier positioning of unit by new slits — FDT

New shape of slit is suitable to install the unit with more flexibility, compatible with many kinds of suspending bolt pitch on site.
Any rectangular or squared pitch of suspending bolts are available with this slit.

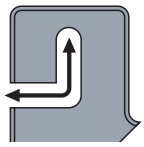

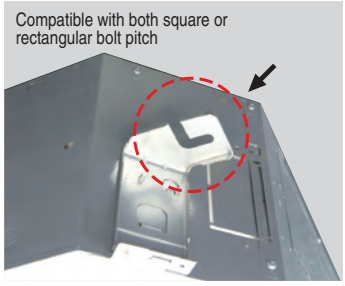

2 New slit in panel allows easier installation on site — FDT, FDTC

Flexible positioning is available, which helps adjusting the direction of panel accordingly to lines or pattern on the ceiling.

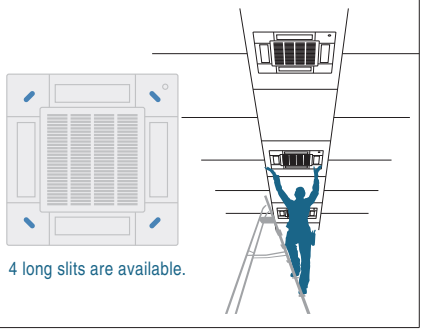

Quick installation and maintenance

1 Easy access to component part for easy maintenance — FDT

1 **The control box and bell mouth can be removed together.**

2 **Easy access to impeller and fan motor.**

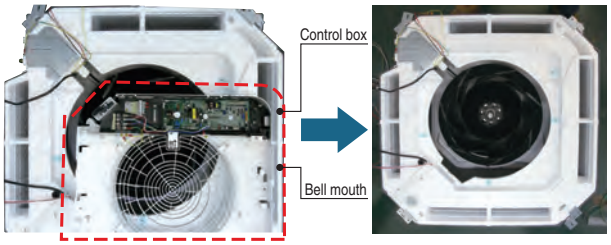

2 New shape of path of wiring — FDT

New shape of path gives easy wiring work for installation.

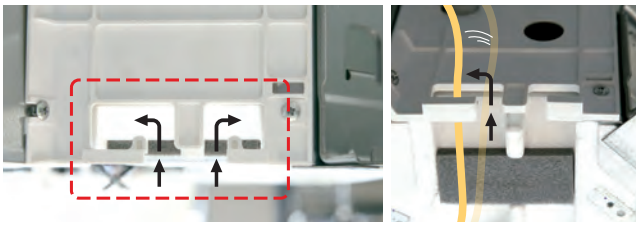

3 No need to remove screws to open the controller cover — FDT

It is possible to loose and slide open the cover without removing the screws.
This prevents the cover from falling and causing damage on site.

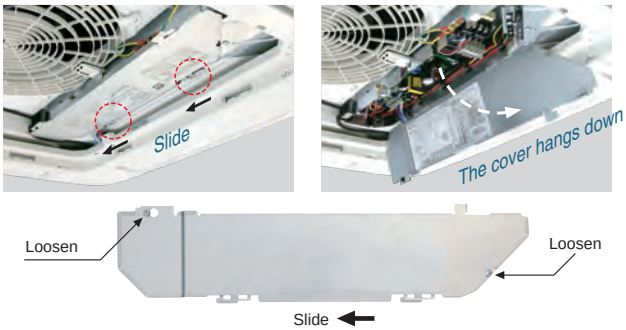

4 More safe installation by stopper of washer — FDT, FDTC

When unit is installed with hook between washers, this stopper helps to install the unit safely, without adjusting washer.

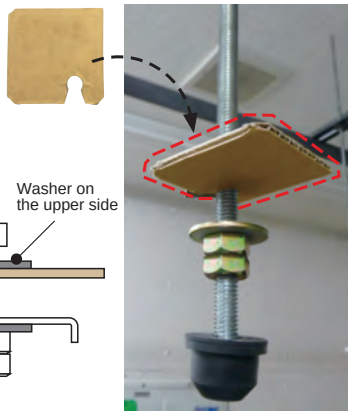

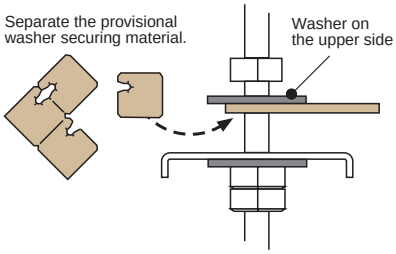

Easy installation and maintenance

1 Easy and flexible hook to remove the filter

FDT FDTC

Hook of soft material helps to remove the filter without dust spreading.

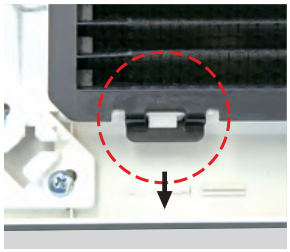

Press the filter tab to the outside and remove the filter.

2 Securely fix the corner lid by strap

FDT

The direction of the strap hook part has been changed from longitudinal to lateral. Furthermore, a barb has been added to the hook pin to prevent the strap from coming off.

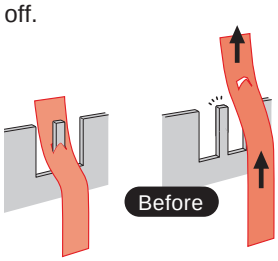

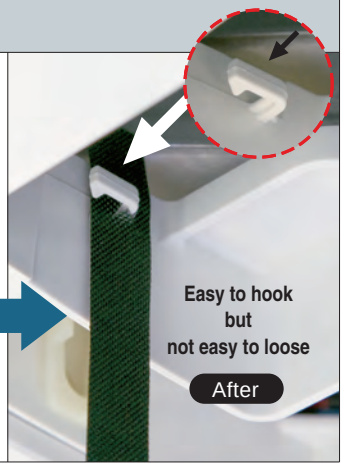

3 Drain-up-lift increases up to 850 mm

FDT FDTC

The drain can be lifted up to 850 mm from the ceiling surface.

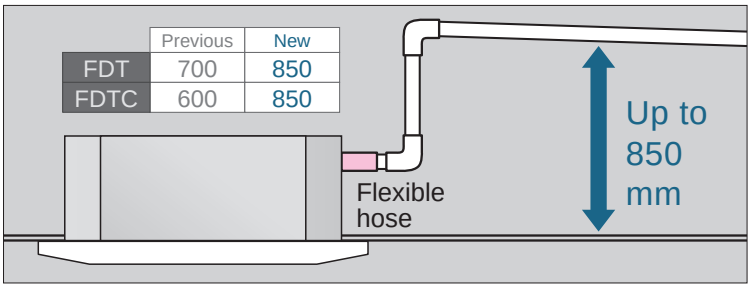

	Previous	New
FDT	700	850
FDTC	600	850

4 New port to check drain water flow

FDT

A water supply port has been provided in the piping lid for easier testing of the drain water flow.
(The port is usually sealed with a rubber cap.)

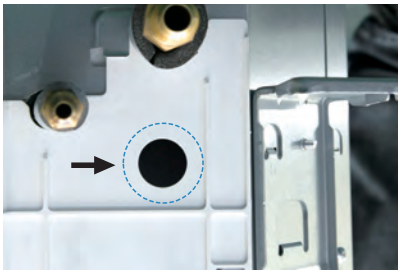

5 Re-use of packages during construction work

FDT FDTC

Package material (carton) helps to protect the unit from unexpected welding spatter or dust on the new unit.

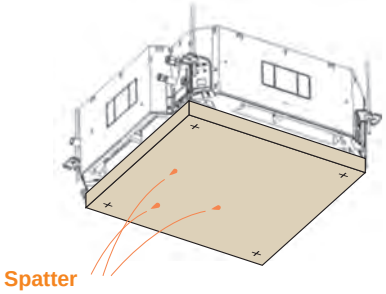

6 More flexible outlet for ducting

FDT FDTC

Both Φ125 and Φ200 (oval shaped) are available.

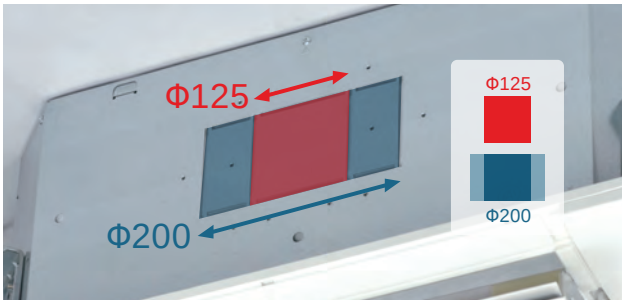

Support tool

TIME SAVING SOFTWARE

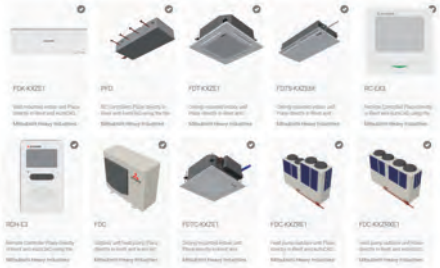

BIM (Building Information Modelling)

We can provide high quality Building Information Modelling (BIM) models in three formats:

1. Revit
2. 3D Cad
3. IFC (IFC provides an interoperability solution between different software applications. The format establishes international standards to import and export building objects and their properties)

How and why BIM is used

BIM enables all disciplines of a project (Architects, engineers, quantity surveyors, contractors, clients etc..) to share a common model and data representing the project they are building.

- Better design visualization
- BIM reduces conflicts and changes during construction
- Increases overall accuracy of project documentation
- Improves cost estimating
- Improves energy analysis
- Simplifies reporting and scheduling

https://mhiae.com/BIM/

e-seasonal

Coming soon

e-seasonal is an application for our Air cooled VRF Outdoor unit selection.

By selecting a combination of systems, location and occupancy profiles you can simulate:

1) Annual seasonal efficiency calculation
2) Annual energy consumption, cost and CO_2 emission estimation
3) Comparison with multiple solutions including conventional heaters

It is possible to download to your PC for an offline version or using a web browser for an online version. e-seasonal provides solution suggestions according to your requested design conditions.

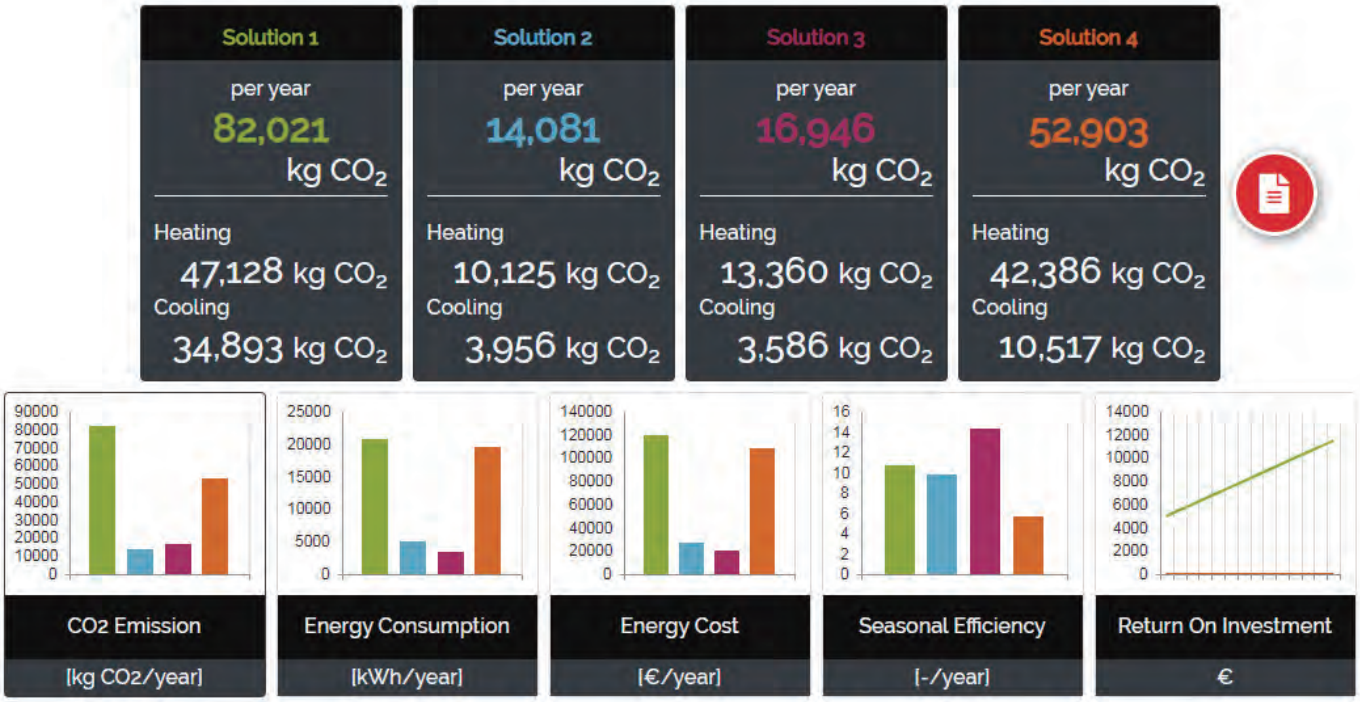

e-solution

Use our e-solution design software tool to find the latest specifications for our KXZ VRF systems. This software helps to simplify the processes to enable engineers to select the most suitable indoor units, outdoor units, pipework, controls & calculate any additional required refrigerants.

If you're an engineer interested in using e-solution, please register and download the e-solution via https://mhiae.com/e-solution/ and be sure to download the latest updates when available.

Please be aware that this tool was developed to cater for the design of two and three pipe systems, and specifies the appropriate models and sizes. It also generates wiring diagrams and engineering drawing to export to AutoCAD or PDF. This flexibility allows engineers to print selected design information and technical data to present to potential clients. As well as personalising the design information into their own formats and documents for future proposals.

MHI e-service App

MHI e-service application is available & free to download to both IOS and Android devices.
The application covers "Mitsubishi Heavy Industries Thermal Systems, Ltd" Air conditioning systems: Split (RAC & PAC), VRF, Q-ton & AtoW.
This "MHI e-service" Application enables field engineers to make:

- A quick search of the meaning of error codes that may appear when there is a malfunction in a "Mitsubishi Heavy Industries Thermal Systems, Ltd" Air conditioning system, and the probable cause for the malfunction.
- Scan the unit's QR code and search the meaning of error codes depending on the model type
- Additional refrigerant charge calculation for Split (PAC, RAC) & VRF
- Currently available in English & Spanish languages and Italian

To download the App go to:
iPhone:https://apps.apple.com/gb/app/mhi-e-service/id1208986291
Android:https://play.google.com/store/apps/details?id=com.mitsubishi.apps.conapp&hl=en_GB

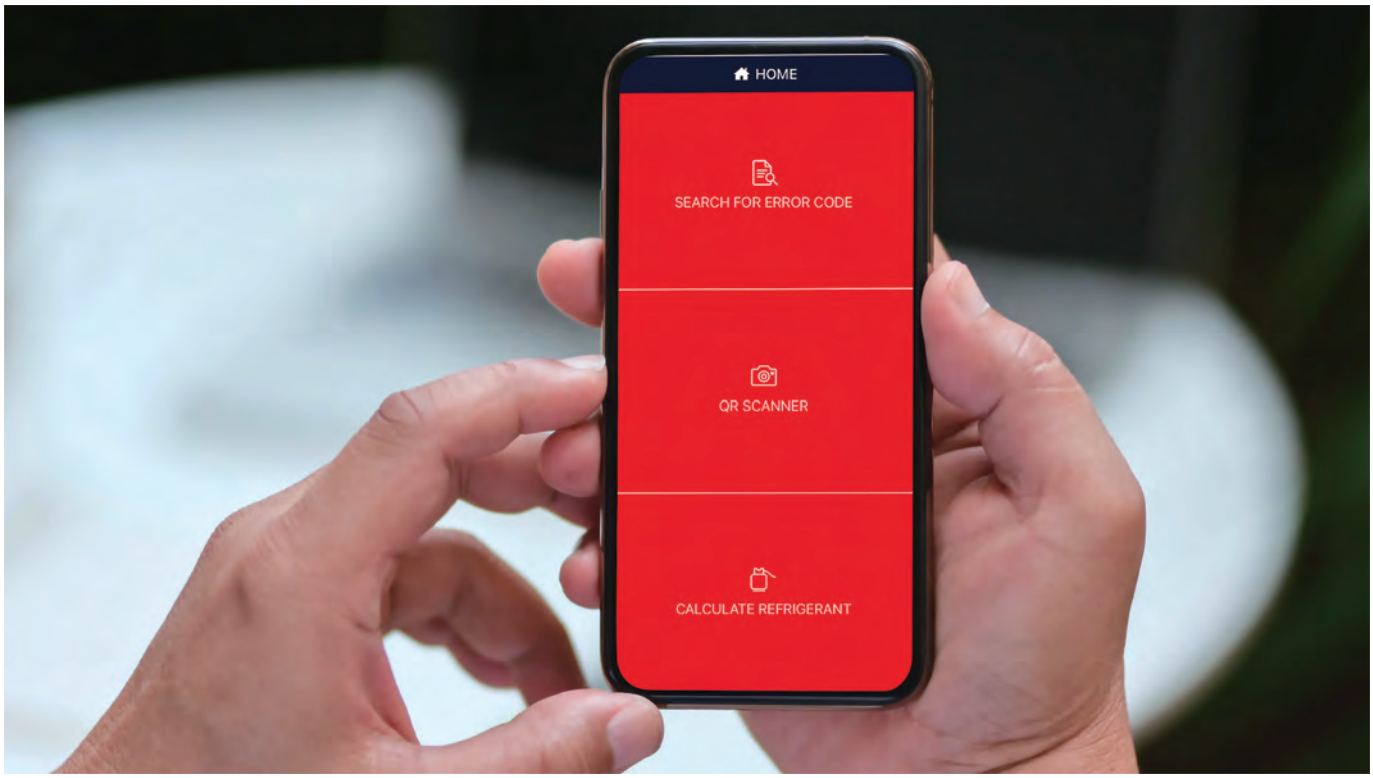

Outdoor unit

High Efficiency & Comfort

Improved Efficiency

The graphs below highlight the improved efficiencies of the KXZ2 standard and Hi-COP models compared to the previous models.

Comparison of EER in cooling mode

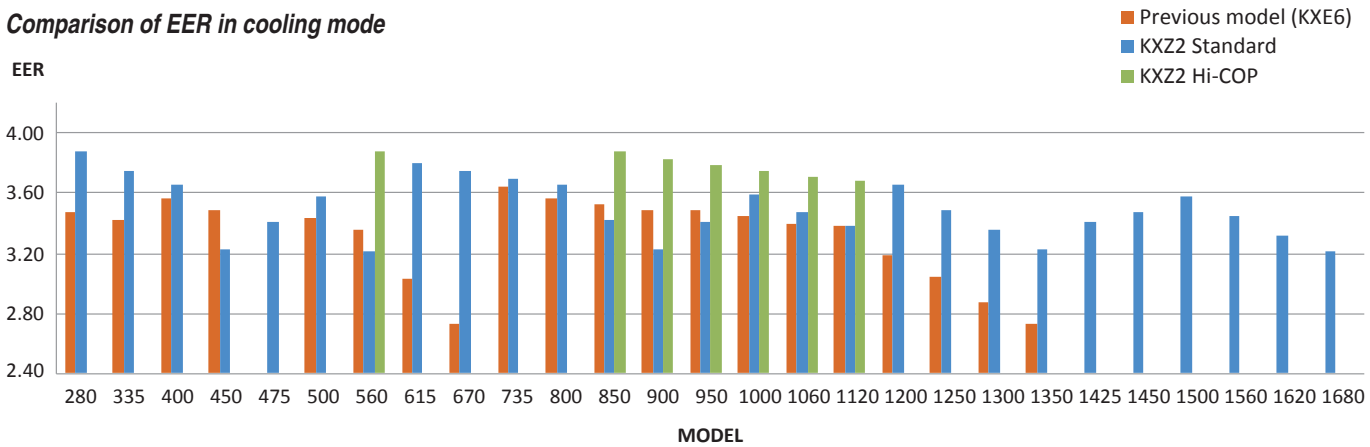

Comparison of COP in heating mode

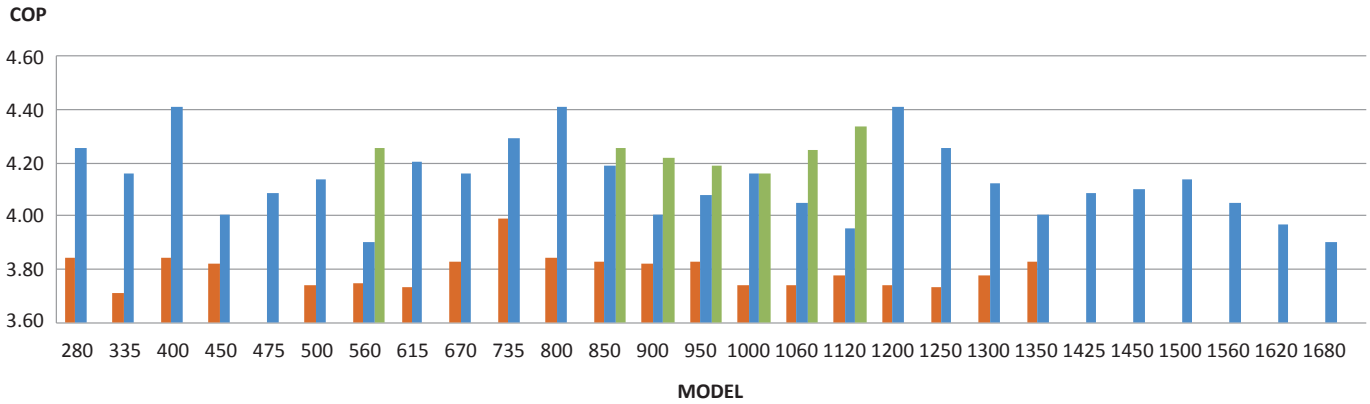

High efficiency and compact design are achieved by applying advanced components

10~60HP

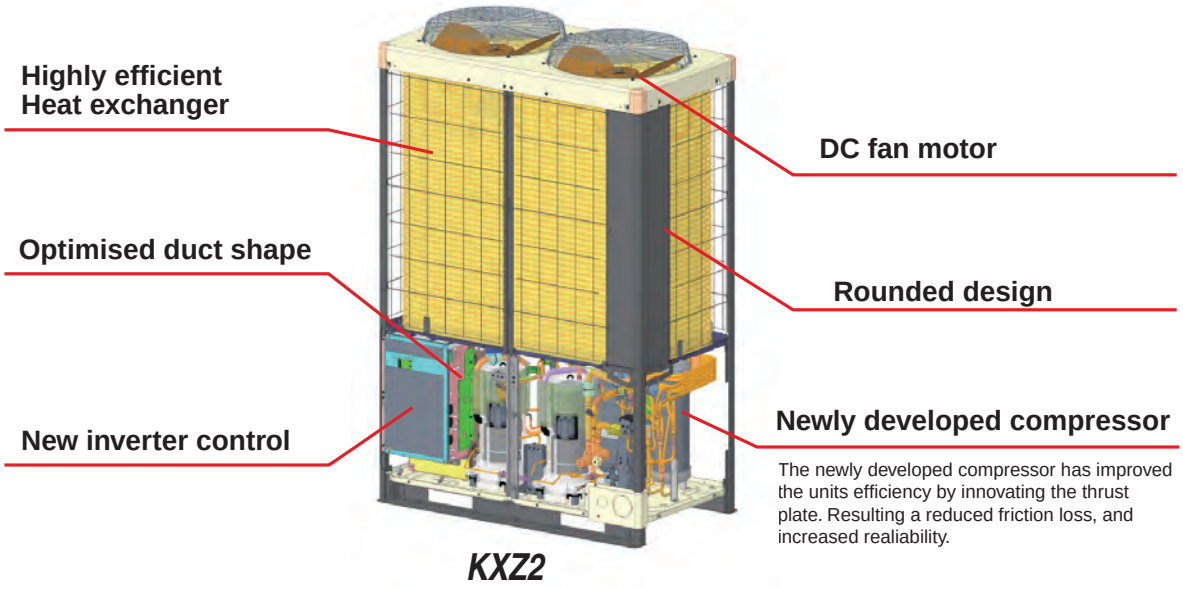

The newly developed compressor has improved the units efficiency by innovating the thrust plate. Resulting a reduced friction loss, and increased realiability.

Variable Temperature and Capacity Control

VTCC

- The VTCC is a energy saving function designed by Mitsubishi Heavy Industries Thermal Systems.
- A new feature to all our KXZ ranges which provides up to 34%* energy savings in both cooling and heating mode.
- VTCC is a function specifically designed to maximise energy savings in partial load conditions throughout all seasons.

*34% energy savings are based on comparison with a KXZ standard model with VTCC vs. a KXZ standard model both under partial load condition.

Normal operation (in the cooling mode)

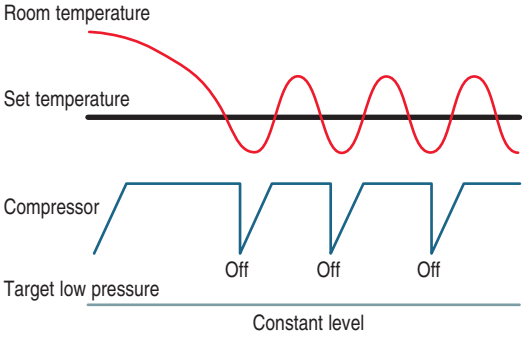

Energy saving operation (in the cooling mode)

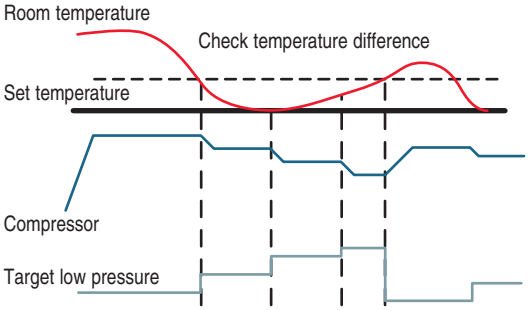

VTCC adjusts the target pressure of the refrigerant cycle in the outdoor unit automatically according to the demand of the indoor units in partial load conditions.
These smooth adjustments ensure an optimal capacity usage of the indoor units as well as maximised energy savings. Ultimately this also increases comfort for the user.
For example, in partial load conditions where you have low cooling and heating requirements, VTCC reduces the compressor frequency and controls the actuators in the outdoor unit.
Overall with the VTCC functionality you will always have an additional energy saving of up to 34% (depending on configuration and usage of system) in low cooling and heating load requirements.

Continuous Heating Capacity Control (CHCC)

Our defrosting control achieves more capacity than that of previous model in low ambient temperature condition.
Target pressure is controlled automatically before capacity drops, which makes longer period of heating operation and shorter defrosting time.

Multiport compressor that achieves high efficiency

The multiport discharge area in the compressor has optimized pressure control with better balancing.
The performance improvement at medium Hz has resulted in higher annual efficiencies.

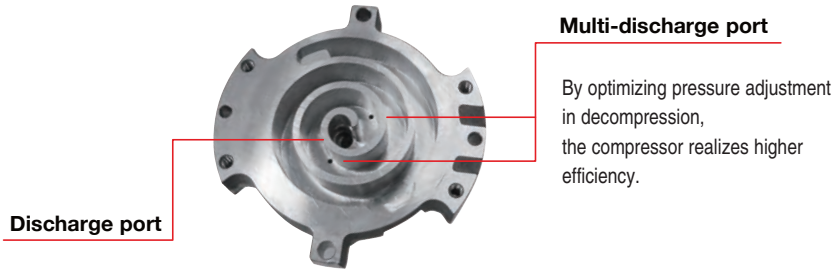

Concentrated winding motor achieves "High Output" and "Total Efficiency Improvement"

The high performance CPU enables high precision optimization for compressor speed, which leads to concentrated winding motor use. Our product achieves high output and better energy saving effects and in particular improves seasonal efficiency rating.

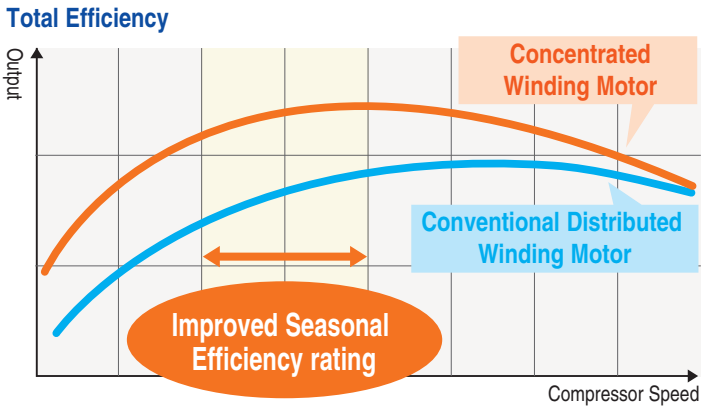

Energy efficient Heat-exchanger

With piping layout rearranged from header to heat exchanger, refrigerant distribution flow has improved and maximum energy efficiency has been achieved.
Furthermore due to expansion of effective the heat transfer area in heat exchanger, energy efficiency has increased.

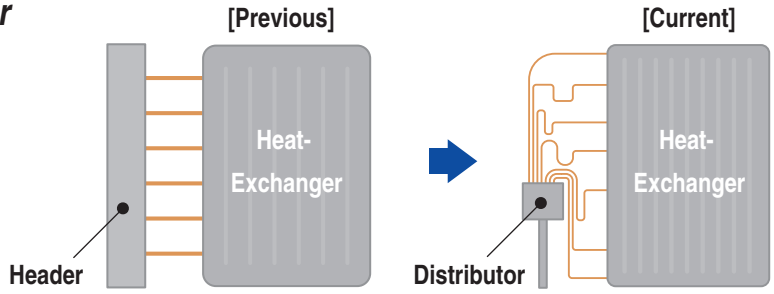

Strengthened resistance against frost

Resistance against frost has been strengthened by adopting the energy efficient heat-exchanger.

Vector control

Applied Vector control has a high efficiency and many new advanced features.

- Smooth operation from low speed to high speed
- Smooth Sine Voltage Wave form are attained
- Energy efficiency is further improved in low speed range

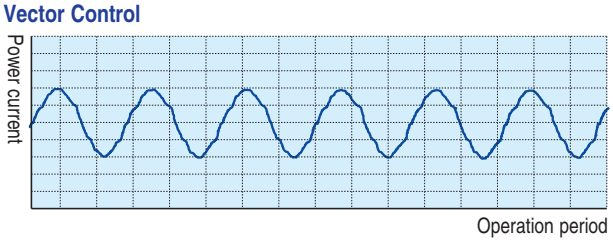

DC Fan Motor

Adoption of DC fan motor has enabled to realize an excellent efficiency of approximate 60% higher than previous models.

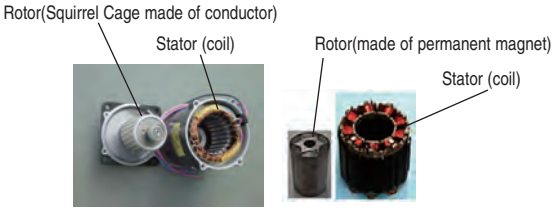

Oil level control capability

Our proprietary technology adjusts the oil level when combining two or three outdoor units, achieving level operation rate, keeping performance of the units and ensuring long life of the system.

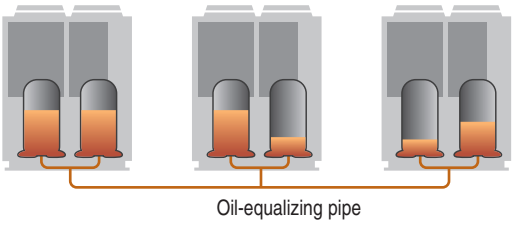

Capacity control

The peak cut function can easily be set on the controller. This function makes the control of the capacity easier and allow a better energy management over the long term. Four steps of capacity control are available with 80%, 60%, 40%, 0% (off). Schedule can be set up to 4 operations/day.

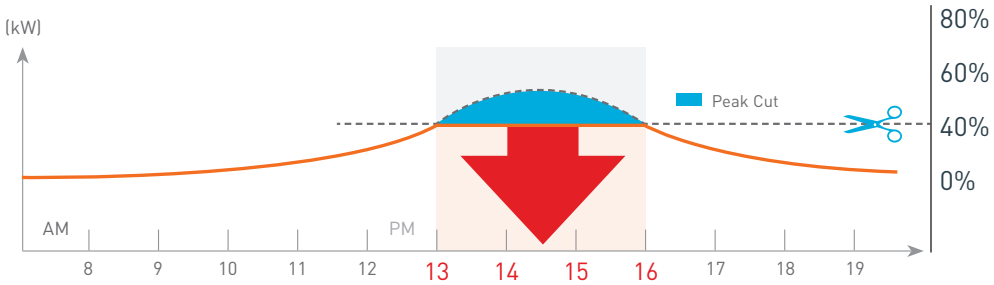

4~6HP (Micro)

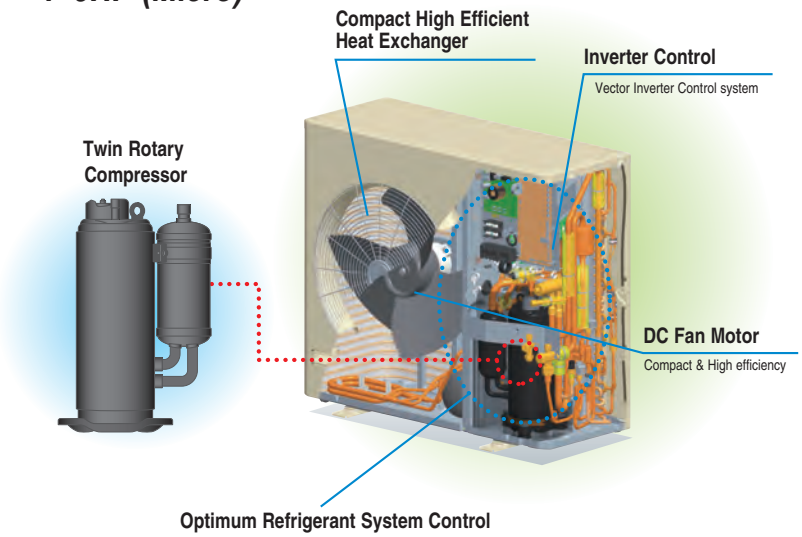

- Optimum heat exchanger refrigerant distribution
- Advanced refrigerant liquid return protection control system
- High speed system control by new Superlink system

Compact high efficiency Heat Exchanger

- Optimizing relationship of the air flow velocity & fin pattern
- Improvement of air distribution Maximizing efficiency of heat exchanger

Heat Exchanger

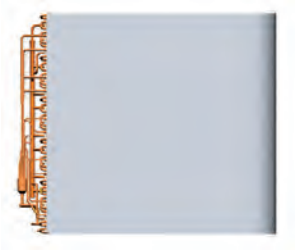

Compact Integrated PCB

- Control Box size reduction
- PCB size reduced by 50%
  Control PCB: Single-sided board ➡ Double-sided board
  Inverter PCB: Power transistor size reduction
- New Superlink system control
- New Design method applied

8~12HP (Micro)

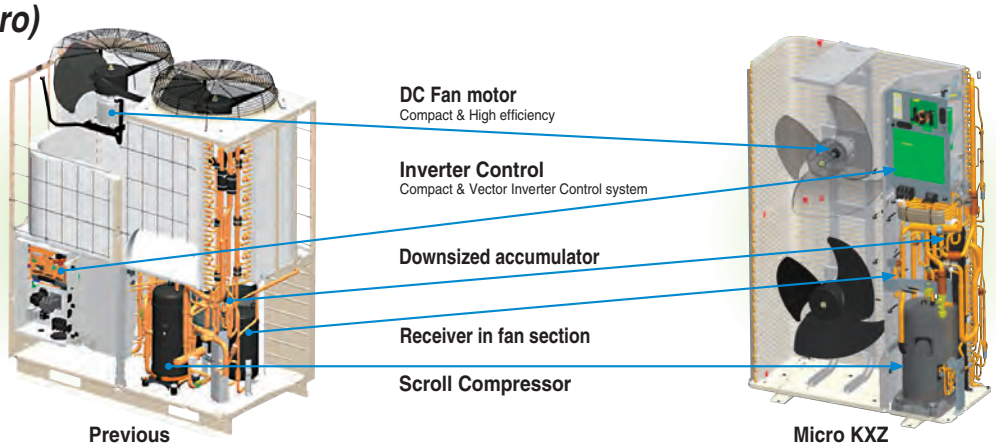

Design Flexibility

Indoor unit capacity connection

	HP	Capacity connection
Micro KXZ	4~6	150%
	8~12	150%
KXZ Lite	8~10	120%
Standard KXZ2	10~16	200%
	17~34	160%
	36~60	130%

Connectable indoor units

Micro KXZ	HP	4	5	6	8	10	12
	Numbers	8	10*	10*	22	24	24

KXZ Lite	HP	8	10
	Numbers	8	8

Standard KXZ2	HP	10	12	14	16	17	18	20	22	24	26	28	30	32	34
	Numbers	37	44	53	60	50	53	59	65	71	78	80	80	80	80
	HP	36	38	40	42	44	46	48	50	52	54	56	58	60	
	Numbers	80	80	80	80	80	80	80	80	80	80	80	80	80	

*When connecting 9 units or more, set the total capacity as follows : 5HP : 110% or less, 6HP : 100% or less. In the case of R410A.

Wide Range of Operation

KXZ series permits an extensible system design with a heating range operation down to -20˚C and a cooling range operation up to 46˚C. Furthermore KXZ Lite extends a cooling range operation up to 50˚C.

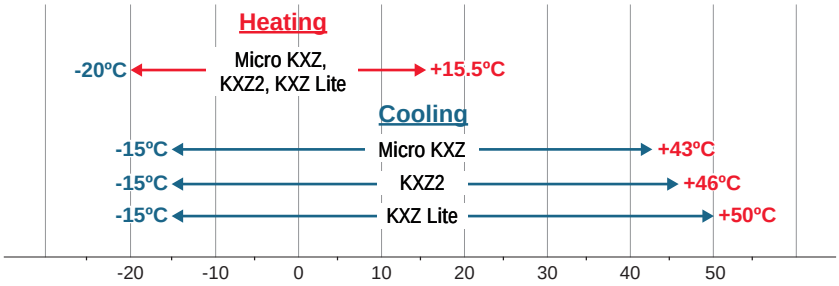

Control Systems

All series offer wide choice of control system and provide the best solution.

[Control system units with SUPERLINK-Ⅱ]

Classification	Type		Model	Connectable Indoor units (Maximum)	Electric power calculation
Individual controller	Wired		RC-E5	16	—
			RC-EX3A	16	—
	Wireless		RCN-T-5BW-E2 etc.	16	—
Center Console	Push buttons		SC-SL1N-E	16	—
			SC-SL2NA-E	64	—
	Touch screen		SC-SL4-AE3	128	—
			SC-SL4-BE3	128	●
	BMS interface units	Web gateway & BACnet	SC-WBGW256	256(128x2)	●
		Lonworks	SC-LGWNB	96	—

Long Pipe Length 10~60HP

The maximum height difference between indoor units has been increased to a maximum of 30m, and the maximum height difference between the outdoor unit and indoor unit has been expanded to 90m. For with few limitations, contributes to system design flexibility.

*1 The difference between the longest and the shortest indoor unit piping from the first branch must be within 40m. (MAX85m)
*2 It is necessary to change the setting corresponding to each height difference in installation. The range of use is also different.

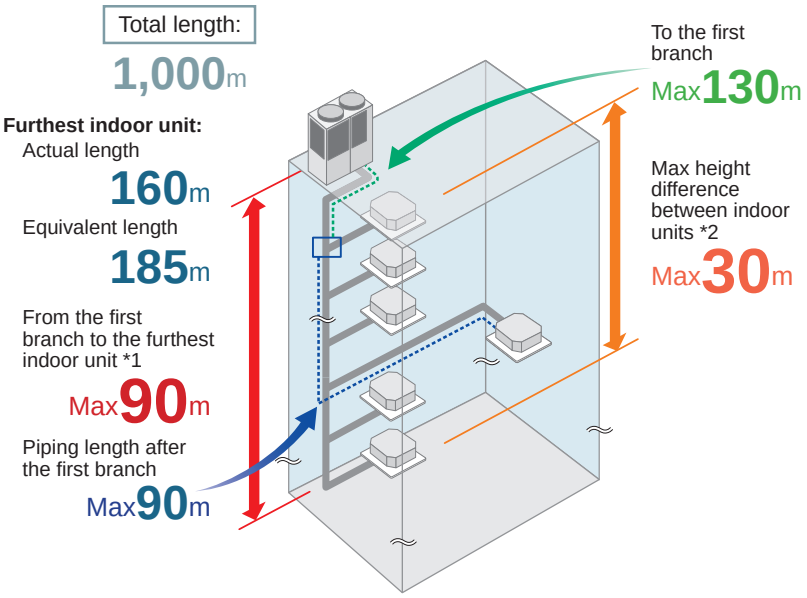

Easy Transportation & Installation

Due to realization of significant reduction in size and footprint which is one of the smallest in the industry, transportation in an elevator made for six persons (Width:1400mm, Depth:850, Open area:800mm) is possible, eliminating cost of a crane and reducing labor.

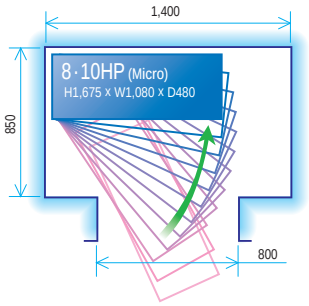

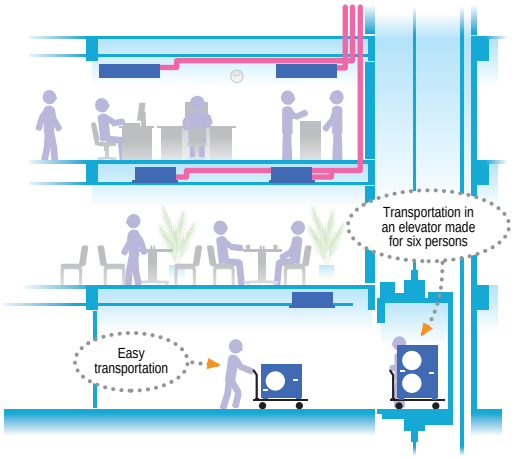

KXZ is portable and the uniform reduced footprint allows neat, continuous installation.

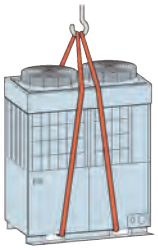

Blue Fin

Due to application of blue coated fins on the heat exchanger of the new outdoor unit, corrosion resistance has been improved compared to previous models.

Priority operation mode rule

User can select the following priority operation mode. (for whole system)

1. First unit's operation mode (by default setting)
2. Last unit's operation mode
3. Majority operation mode (see below)
4. Master operation mode (see below)

<Majority operation mode>

The system is operated according to the mode selected by the majority of units in operation (whichever greater capacity between the sums of cooling mode and heating mode).
The operation mode in minority is set to fan mode automatically.

<Master operation mode>

The system is operated according to master operation mode.
When master operation mode is set at cooling mode, units selected as heating mode is set to fan mode automatically.

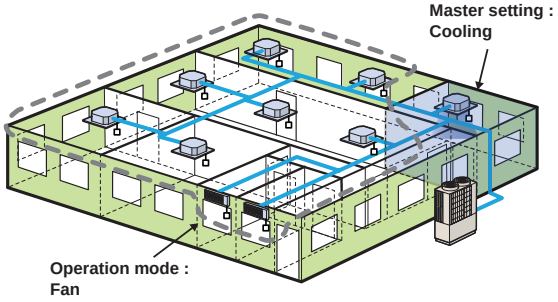

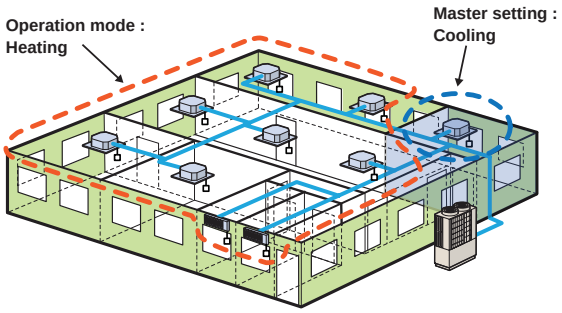

Fixed Cooling mode/fixed heating mode (summer/winter switch)

It is possible to fix the operational mode of the system (either cooling or heating) using a switch (SW3-7) on the outdoor unit PC board - this enables the building user to decide the operation of the system (e.g. cooling only in summer/heating only in winter), to avoid unnecessary energy wastage.
It is also possible to wire the control switch to a remote location (inside the building) to a control room, or even linked to an ambient thermostat.

Serviceability

Easy Service

Quick and easy access to service parts by separation of compartments.

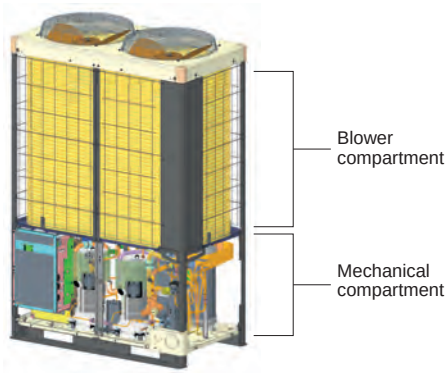

Check Operation (10~60HP)

Closing of Service valve, crossing connection of refrigerant piping and electrical wiring, proper operation of EEV (Electrical Expansion Valve) can be checked automatically in cooling operation. This check operation can be done at 0~43ºC outdoor temperature and 10~32ºC indoor temperature by use of outdoor unit dip switch.
The check should be done in one refrigerant system. It takes 15~30 minutes and avoids frequent failure by preventing careless mistakes during installation.

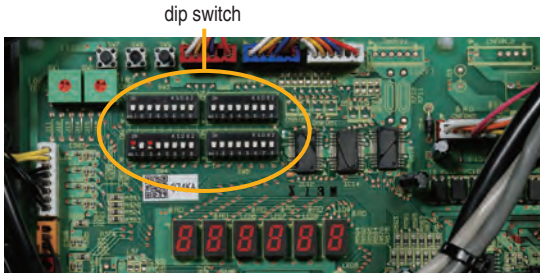

Monitoring Function

All series include features to assist with servicing and troubleshooting.
Various data can be monitored through 3-digit or 6-digit display on the outdoor unit PCB.

Detailed fault diagnosis and operation history memory via 7-segment display.

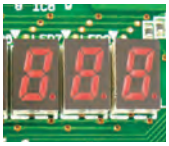

4~6HP
8.10HP(KXZ Lite)

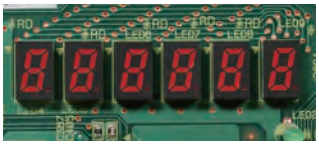

8~60HP

To your PC monitoring and service tasks made simple with our service software ("Mente PC").

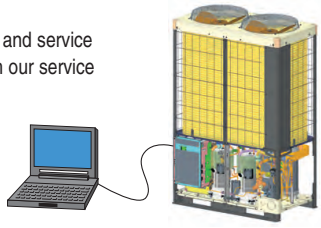

Automatically produced test-run report

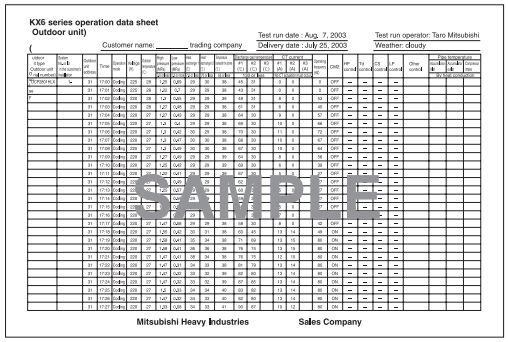

KX6 series operation data sheet
Outdoor unit)

Test run date : Aug. 7, 2003
Delivery date : July 25, 2003
Test run operator: Taro Mitsubishi
Weather: cloudy

Customer name: _____ trading company: _____

Mitsubishi Heavy Industries Sales Company

SAMPLE

Operation data storage during servicing

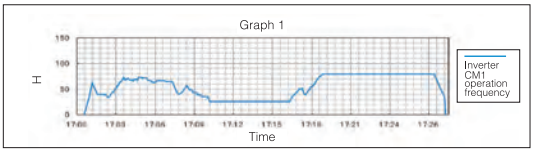

Operation data storage when a fault occurs

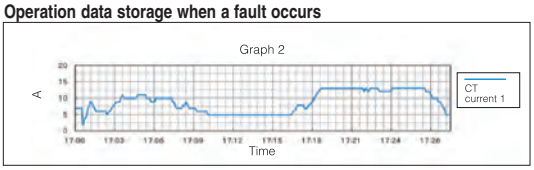

SL Checker II

Remote Control can be operated function from setting Superlink checker.

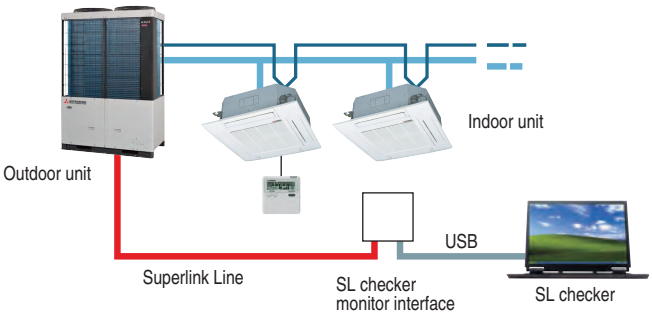

3 Layer Construction

Thanks to control box structure with 3 layer/2 layer construction using hinge connection, service and maintenance has been made much easier for inverter components.

KXZ (3 layer)

KXZ Lite (2 layer)

Back-up Operation

In the event that one unit has a failure, the system will keep operating with the other units.

Combination of two or three outdoor units

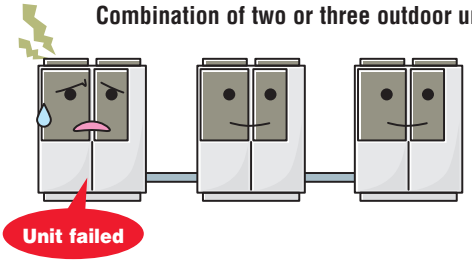

For the event that one compressor has a failure, the unit will keep operating with the other second compressor.

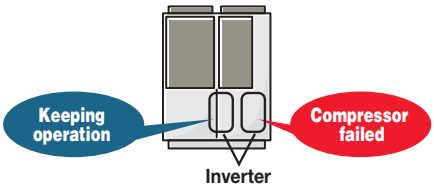

This operation is an emergency measure for a limited time and a necessary repair should be done as soon as possible.

Micro KXZ Heat pump systems
4 ~ 6HP (12.1kW~15.5kW)

Model No.	Nominal Cooling Capacity
FDC121KXZEN1-W	12.1kW (220V)
FDC140KXZEN1-W	14.0kW (220V)
FDC155KXZEN1-W	15.5kW (220V)
FDC121KXZES1-W	12.1kW (380V)
FDC140KXZES1-W	14.0kW (380V)
FDC155KXZES1-W	15.5kW (380V)

NEW

Blue Fin

- Low Global Warming Potential (GWP) and High energy effciency by new refrigerant R32.
- Connect up to 10 indoor units/up to 150% capacity.
- High efficiency with EER up to 4.08.
- These units employ DC inverter compressors ONLY.
- Industry leading total piping length up to 100m and a maximum pipe run of 70m.

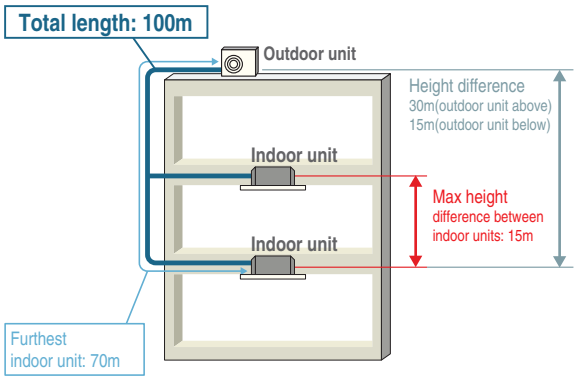

* The total length of ø9.52mm(3/8") liquid piping must be 50m or less

Range of operation

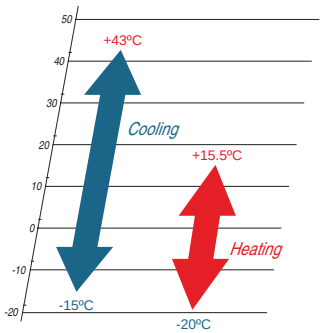

Specifications

Item			Model	FDC121KXZEN1-W	FDC140KXZEN1-W	FDC155KXZEN1-W	FDC121KXZES1-W	FDC140KXZES1-W	FDC155KXZES1-W
Nominal horse power				4HP	5HP	6HP	4HP	5HP	6HP
Power source				1 Phase 220-240V, 50Hz			3 Phase 380-415V, 50Hz		
Starting current			A	5					
Max current			A	23			13.5		
Nominal capacity	Cooling		kW	12.1	14.0	15.5	12.1	14.0	15.5
	Heating			12.1	14.0	15.5	12.1	14.0	15.5
Electrical characteristics	Power consumption	Cooling	kW	2.97	4.00	5.20	2.97	4.00	5.20
		Heating		2.88	3.52	4.06	2.88	3.52	4.06
SEER/SCOP				9.67 / 4.67	8.82 / 4.62	8.17 / 4.58	9.67 / 4.67	8.82 / 4.62	8.17 / 4.58
Exterior dimensions	HxWxD		mm	845x970x370					
Net weight			kg	85			87		
Sound pressure level	Cooling/Heating		dB(A)	54/56	54/58	54/58	54/56	54/58	54/58
Refrigerant	Type / GWP			R32 / 675					
	Charge		kg/TCO2Eq	4.2 / 2.835					
Refrigerant piping size	Liquid line		mm(in)	ø9.52 (3/8")					
	Gas line			ø15.88 (5/8")					
Capacity connection			%	80~150					
Number of connectable indoor units				8	10	10	8	10	10

1.The data are measured under the following conditions (ISO-T1, H1). Cooling: indoor temp. of 27°CDB, 19°CWB, and outdoor temp. of 35°CDB. Heating: indoor temp. was 20°CDB, and outdoor temp. of 7°CDB, 6°CWB.
2.Sound pressure level indicates the value in an anechoic chamber. During operation these values were are somewhat higher due to ambient conditions.
3.'tonne(s) of CO_2 equivalent' means a quantity of greenhouse gases-expressed as the product of the weight of greenhouse gases in metric tonnes and of their global warming potential

Refrigerant piping

Outdoor unit (HP)		4	5	6
Gas pipe	Furthest indoor unit =<70m	ø15.88		
Liquid pipe		ø9.52		

Branch pipes

DIS-22-1G
DIS-180-1G

Header pipe

HEAD4-22-1G
HEAD6-180-1G

Dimensions

All measurements in mm.

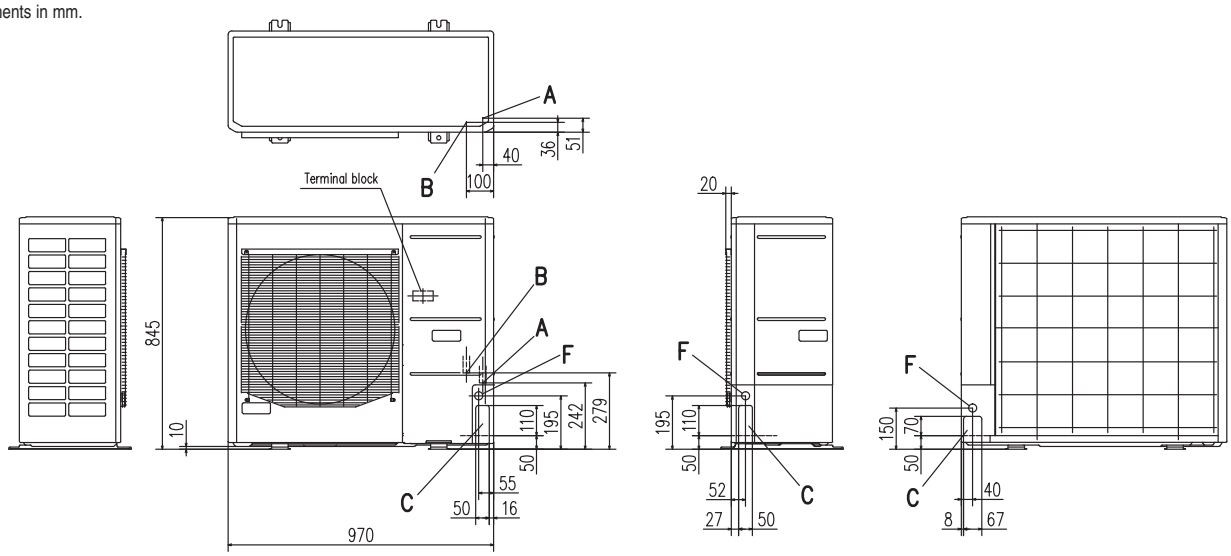

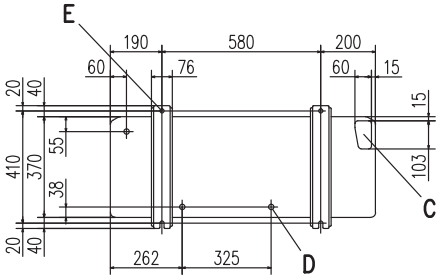

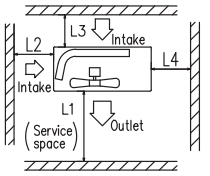

Minimum installation space

	I	II	III
L_1	Open	Open	500
L_2	300	5	Open
L_3	150	300	150
L_4	5	5	5

Mark	Content	
A	Service valve connection (gas side)	ø15.88 (5/8") (Flare)
B	Service valve connection (liquid side)	ø9.52 (3/8") (Flare)
C	Pipe/cable draw-out hole	
D	Drain discharge hole	ø20 x 3 places
E	Anchor bolt hole	M10 x 4 places
F	Cable draw-out hole	ø30 x 3 places

Notes:
(1) It must not be surrounded by walls on the four sides.
(2) The unit must be fixed with anchor bolts. An anchor bolt must not protrude more than 15mm.
(3) Where the unit is subject to strong winds, lay it in such a direction that the blower outlet faces perpendicularly to the dominant wind direction.
(4) Leave 1m or more space above the unit.
(5) A wall in front of the blower outlet must not exceed the units height.
(6) The model name label is attached on the lower right corner of the front panel.

Seasonal efficiency of Eurovent certification condition

Item	Model					
	FDC121KXZEN1-W	FDC140KXZEN1-W	FDC155KXZEN1-W	FDC121KXZES1-W	FDC140KXZES1-W	FDC155KXZES1-W
SEER*	8.63	8.36	7.87	7.87	8.36	7.87
SCOP*	4.40	4.43	4.41	4.40	4.43	4.41

(*) Combination with FDT
(*) The Eurovent certificate condition is based on the max air flow limit of 275m3/h/kW

Micro KXZ Heat pump systems

4 ~ 6HP (12.1kW~15.5kW)

Model No.	Nominal Cooling Capacity
FDC121KXZEN1	12.1kW (220V)
FDC140KXZEN1	14.0kW (220V)
FDC155KXZEN1	15.5kW (220V)
FDC121KXZES1	12.1kW (380V)
FDC140KXZES1	14.0kW (380V)
FDC155KXZES1	15.5kW (380V)

Blue Fin

- Connect up to 10* indoor units/up to 150% capacity.
- High efficiency with EER up to 3.82.
- These units employs DC inverter compressors ONLY.
- Industry leading total piping length up to 100m and a maximum pipe run of 70m.

*When connecting 9 units or more, set the total capacity as follows : 5HP : 110% or less, 6HP : 100% or less.

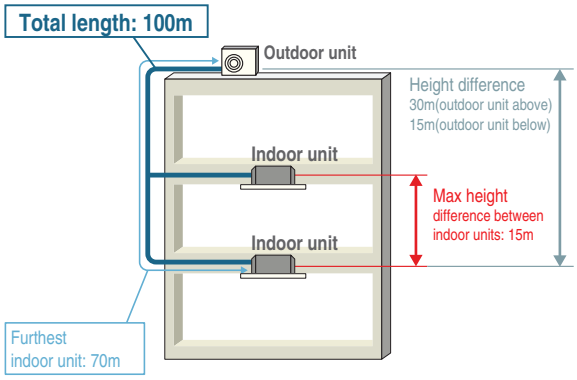

* The total length of ø9.52mm(3/8") liquid piping must be 50m or less

Range of operation

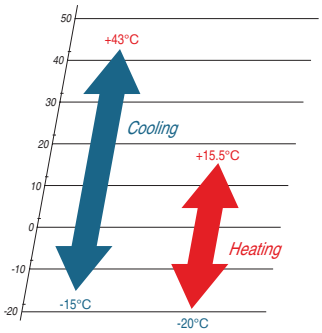

Specifications

Item			Model	FDC121KXZEN1	FDC140KXZEN1	FDC155KXZEN1	FDC121KXZES1	FDC140KXZES1	FDC155KXZES1
Nominal horse power				4HP	5HP	6HP	4HP	5HP	6HP
Power source				1 Phase 220-240V, 50Hz			3 Phase 380-415V, 50Hz		
Starting current			A	5					
Max current			A	28			13.5		
Nominal capacity	Cooling		kW	12.1	14.0	15.5	12.1	14.0	15.5
	Heating			12.1	14.0	15.5	12.1	14.0	15.5
Electrical characteristics	Power consumption	Cooling	kW	3.16	3.96	5.20	3.16	3.96	5.20
		Heating		3.09	3.66	4.28	3.09	3.66	4.28
SEER/SCOP				8.15 / 4.63	7.73 / 4.59	7.21 / 4.55	8.15 / 4.63	7.73 / 4.59	7.21 / 4.55
Exterior dimensions	HxWxD		mm	845x970x370					
Net weight			kg	85			87		
Sound pressure level	Cooling/Heating		dB(A)	53/56	53/57	54/57	53/56	53/57	54/57
Refrigerant	Type / GWP			R410A / 2088					
	Charge		kg/TCO2Eq	5.0 / 10.44					
Refrigerant piping size	Liquid line		mm(in)	ø9.52(3/8")					
	Gas line			ø15.88(5/8")					
Capacity connection			%	80~150					
Number of connectable indoor units				8	10*	10*	8	10*	10*

1.The data are measured under the following conditions (ISO-T1, H1). Cooling: indoor temp. of 27°CDB, 19°CWB, and outdoor temp. of 35°CDB. Heating: indoor temp. was 20°CDB, and outdoor temp. of 7°CDB, 6°CWB.
2.Sound pressure level indicates the value in an anechoic chamber. During operation these values were are somewhat higher due to ambient conditions.
3.'tonne(s) of CO_2 equivalent' means a quantity of greenhouse gases-expressed as the product of the weight of greenhouse gases in metric tonnes and of their global warming potential

Refrigerant piping

Outdoor unit (HP)		4	5	6
Gas pipe	Furthest indoor unit =<70m	ø15.88		
Liquid pipe		ø9.52		

Branch pipes

DIS-22-1G
DIS-180-1G

Header pipe

HEAD4-22-1G
HEAD6-180-1G

Dimensions

All measurements in mm.

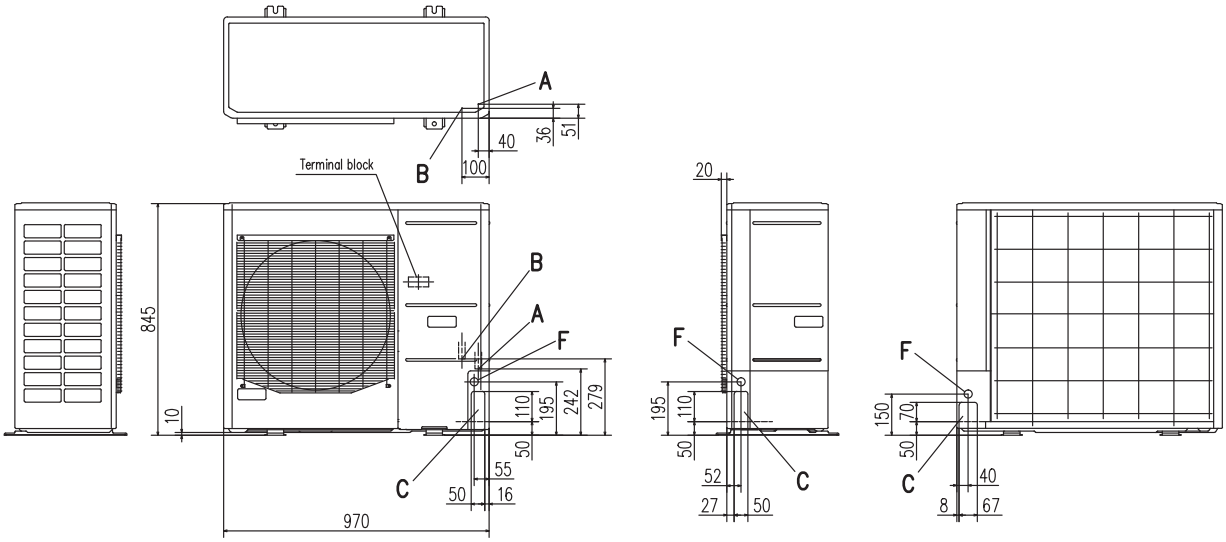

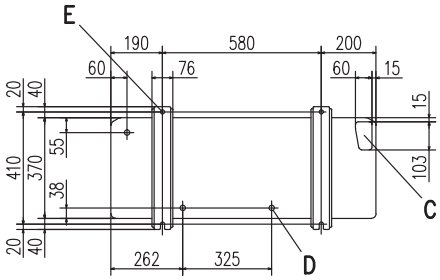

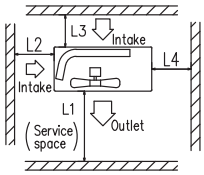

Minimum installation space

	I	II	III
L_1	Open	Open	500
L_2	300	5	Open
L_3	150	300	150
L_4	5	5	5

Mark	Content	
A	Service valve connection (gas side)	ø15.88 (5/8") (Flare)
B	Service valve connection (liquid side)	ø9.52 (3/8") (Flare)
C	Pipe/cable draw-out hole	
D	Drain discharge hole	ø20 x 3 places
E	Anchor bolt hole	M10 x 4 places
F	Cable draw-out hole	ø30 x 3 places

Notes:
(1) It must not be surrounded by walls on the four sides.
(2) The unit must be fixed with anchor bolts. An anchor bolt must not protrude more than 15mm.
(3) Where the unit is subject to strong winds, lay it in such a direction that the blower outlet faces perpendicularly to the dominant wind direction.
(4) Leave 1m or more space above the unit.
(5) A wall in front of the blower outlet must not exceed the units height.
(6) The model name label is attached on the lower right corner of the front panel.

Seasonal efficiency of Eurovent certification condition

Item	Model					
	FDC121KXZEN1	FDC140KXZEN1	FDC155KXZEN1	FDC121KXZES1	FDC140KXZES1	FDC155KXZES1
SEER*	7.37	7.06	6.68	7.37	7.06	6.68
SCOP*	4.52	4.52	4.41	4.52	4.52	4.41

(*) Combination with FDT
(*) The Eurovent certificate condition is based on the max air flow limit of 275m3/h/kW

Micro KXZ Heat pump systems

8 ~ 12HP (22.4kW~33.5kW)

Blue Fin

Model No.	Nominal Cooling Capacity
FDC224KXZME1	22.4kW
FDC280KXZME1	28.0kW
FDC335KXZME1A	33.5kW

- Connect up to 24 indoor units/up to 150% capacity.
- High efficiency with EER up to 4.00.
- These units employ DC inverter compressors ONLY.
- Industry leading total piping length up to 510m and a maximum pipe run of 160m.

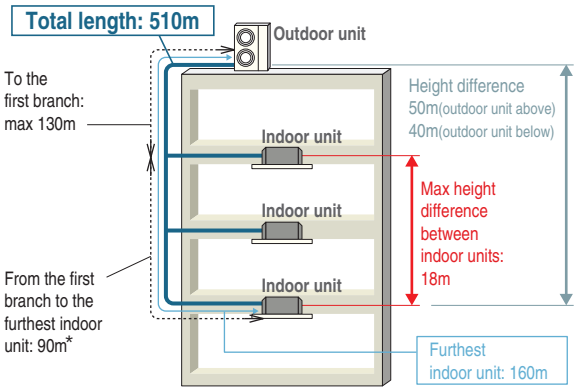

* The difference between the longest and the shortest indoor unit piping from the first branch must be within 40m.

Range of operation

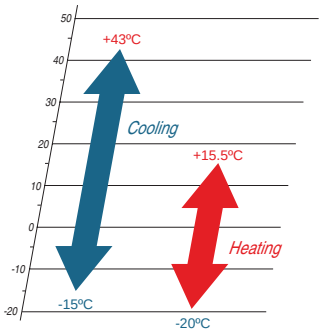

Specifications

Item			Model	FDC224KXZME1	FDC280KXZME1	FDC335KXZME1A
Nominal horse power				8HP	10HP	12HP
Power source				3 Phase 380-415V, 50Hz		
Starting current			A	5		
Max current			A	20		23
Nominal capacity	Cooling		kW	22.4	28.0	33.5
	Heating			22.4	28.0	33.5
Electrical characteristics	Power consumption	Cooling	kW	5.59	7.90	10.68
		Heating		4.97	6.53	8.44
Exterior dimensions	HxWxD		mm	1675x1080x480		
Net weight			kg	221		224
Sound pressure level	Cooling/Heating		dB(A)	58/59	60/60	60/62
Refrigerant	Type / GWP			R410A / 2088		
	Charge		kg/TCO2Eq	11.5 / 24.012		
Refrigerant piping size	Liquid line		mm(in)	ø9.52(3/8")		ø12.7(1/2")
	Gas line			ø19.05(3/4")	ø22.22(7/8")	ø25.4(1") [ø22.22(7/8")]
Capacity connection			%	50~150		
Number of connectable indoor units				22	24	24

1. The data are measured under the following conditions(ISO-T1, H1). Cooling: Indoor temp. of 27ºCDB, 19ºCWB, and outdoor temp. of 35ºCDB. Heating: Indoor temp. of 20ºCDB, and outdoor temp. of 7ºCDB, 6ºCWB.
2. Sound pressure level indicates the value in an anechoic chamber. During operation these values are somewhat higher due to ambient conditions.
3. 'tonne(s) of CO_2 equivalent' means a quantity of greenhouse gases- expressed as the product of the weight of the greenhouse gases in metric tonnes and of their global warming potential.
4. [ ] : Pipe sizes applicable to European installations are shown in parentheses.

Refrigerant piping

Outdoor unit (HP)		Micro KXZ			KXZ Lite	
		8	10	12	8	10
Gas pipe	Furthest indoor unit =<90m	ø19.05	ø22.22	ø25.4(ø22.22)	ø19.05	ø22.22
Liquid pipe		ø9.52		ø12.7	ø9.52	
Gas pipe	90m =<Furthest indoor unit	ø22.22	ø25.4(ø22.22)		ø22.22	ø25.4 / ø28.58
Liquid pipe		ø12.7			ø9.52	

Branch pipes

DIS-22-1G
DIS-180-1G

DIS-371-1G

Header pipe

HEAD4-22-1G
HEAD6-180-1G
HEAD8-371-2

Dimensions

All measurements in mm.

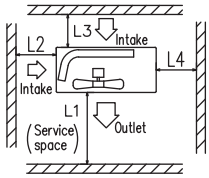

Minimum installation space

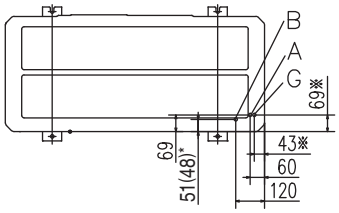

	I	II	III
L_1	Open	Open	1500(500)*1
L_2	300	5	Open
L_3	300	300	300
L_4	250(5)*2	250(5)*2	250(5)*2

Notes:
*1 Figure in ( ) shows the value applicable when the flex flow adaptor is installed.
*2 Under the setting condition as specified in ( ), it is necessary to secure 250 mm for the dimension L4 when replacing the compressor. Establish this for example by moving the unit during the work.

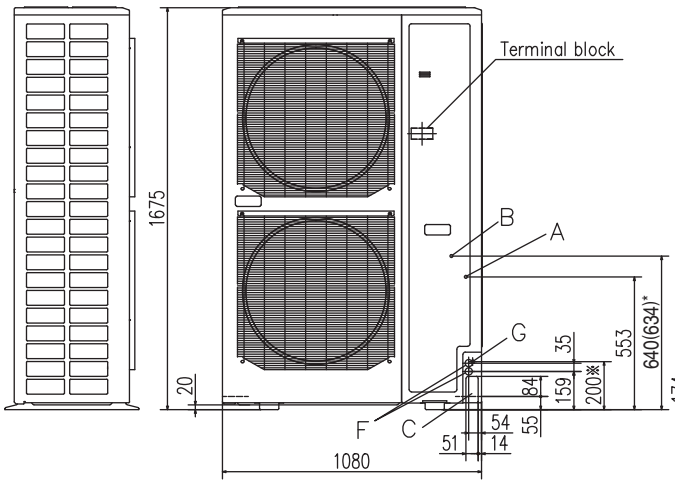

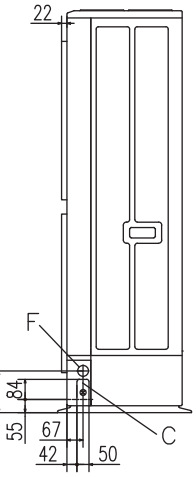

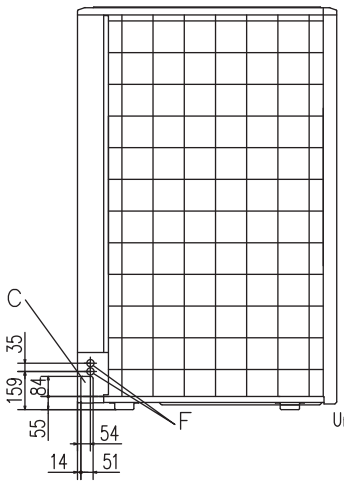

Unit: mm

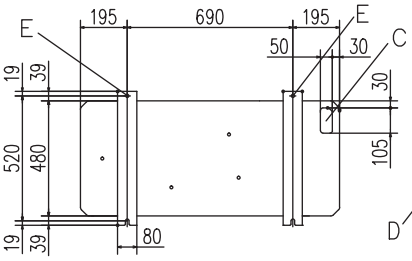

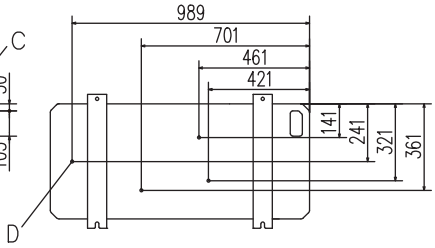

*The value of 335 model in ( )

Mark	Content	224	280	335
A	Service valve connection of the attached connecting pipe (gas side)	ø19.05 (3/4") (Flare)	ø19.05 (3/4") (Flare)	ø19.05 (3/4") (Flare)
B	Service valve connection (liquid side)	ø9.52 (3/8") (Flare)	ø9.52 (3/8") (Flare)	ø12.7 (1/2") (Flare)
C	Pipe/cable draw-out hole	4places	4places	4places
D	Drain discharge hole	ø20 x 4places	ø20 x 4places	ø20 x 4places
E	Anchor bolt hole	M10 x 4places	M10 x 4places	M10 x 4places
F	Cable draw-out hole	ø30 x 2places (front) ø45 (side) ø30 x 2places (back)	ø30 x 2places (front) ø45 (side) ø30 x 2places (back)	ø30 x 2places (front) ø45 (side) ø30 x 2places (back)
G	Connecting position of the local pipe. (gas side)	ø19.05 (3/4")(Brazing)	ø22.22 (7/8")(Brazing)	ø25.4 (1")(Brazing)

Notes:
(1) It must not be surrounded by walls on the four sides.
(2) The unit must be fixed with anchor bolts. An anchor bolt must not protrude more than 15mm.
(3) Where the unit is subject to strong winds, the blower outlet shoud face perpendicularly to the dominant wind direction.
(4) Leave a 1m or more space above the unit.
(5) A wall in front of the blower outlet must not exceed the units height.
(6) The model name label is attached on the lower right corner of the front.
(7) Connect the Service valve with local pipe by using the pipe of the attachment.(Gas side only)
(8) Mark ※ shows the connecting position of the local pipe.(Gas side only)

KXZ Lite Heat pump systems

8, 10HP (22.4kW, 28.0kW)

Blue Fin

Model No.	Nominal Cooling Capacity
FDC224KXZPE1	22.4kW
FDC280KXZPE1	28.0kW

- Connect up to 8 indoor units/up to 120% capacity.
- High efficiency with EER up to 4.00.
- These units employ DC inverter multiport compressors with concentrated winding motor.
- KXZ Lite extends a cooling range operation up to 50°C.
- External static pressure is available up to 35 Pa.
- Tropical usage mode.

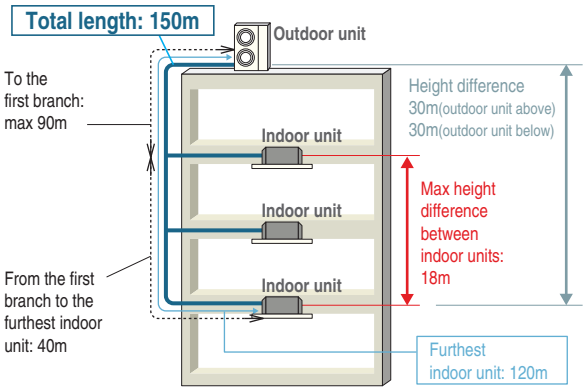

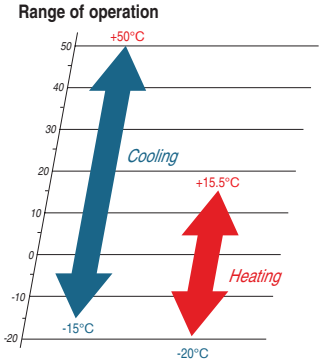

Specifications

Item			Model	FDC224KXZPE1	FDC280KXZPE1
Nominal horse power				8HP	10HP
Power source				3 Phase 380-415V, 50Hz	
Starting current			A	5	
Max current			A	21	22
Nominal capacity	Cooling		kW	22.4	28.0
	Heating			22.4	28.0
Electrical characteristics	Power consumption	Cooling	kW	5.6	7.87
		Heating		4.8	6.47
Exterior dimensions	HxWxD		mm	1505x970x370	
Net weight			kg	165	
Sound pressure level	Cooling/Heating		dB(A)	59/60	60/63
Refrigerant	Type / GWP			R410A / 2088	
	Charge		kg/TCO2Eq	8.9 / 18.583	
Refrigerant piping size	Liquid line		mm(in)	ø9.52(3/8")	
	Gas line			ø19.05(3/4")	ø22.22(7/8")
Capacity connection			%	50~120	
Number of connectable indoor units				8	8

1. The data are measured under the following conditions(ISO-T1, H1). Cooling: Indoor temp. of 27°CDB, 19°CCWB, and outdoor temp. of 35°CDB. Heating: Indoor temp. of 20°CDB, and outdoor temp. of 7°CDB, 6°CWB.
2. Sound pressure level indicates the value in an anechoic chamber. During operation these values are somewhat higher due to ambient conditions.
3. 'tonne(s) of CO_2 equivalent' means a quantity of greenhouse gases- expressed as the product of the weight of the greenhouse gases in metric tonnes and of their global warming potential.

Serviceability

Improved freedom of piping layout

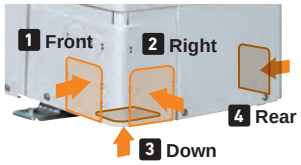

Hole size became 120% bigger.

A transparent rain cover

Attached as a standard for easy maintenance.

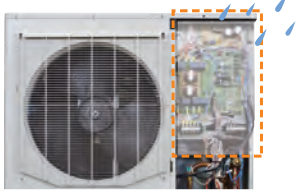

Wire insertion holes for fall prevention

Fixing screws to service panel

Decreased number of screws from 5 to 2, installation & service speed is improved.

Four handles

Located at the same level for easy transport and transfer.

Refrigerant piping

Please refer to page 39.

Dimensions

All measurements in mm.

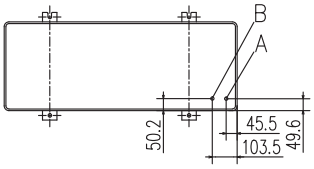

	I	II	III
L_1	Open	Open	500
L_2	300	5	Open
L_3	150	300	150
L_4	250 (5)*1	250 (5)*1	250 (5)*1

Notes:
*1 At the time of the installation at ( ) dimension, Secure space of 250mm in lateral (L4) by unit movement at the time of the exchange work of the compressor.

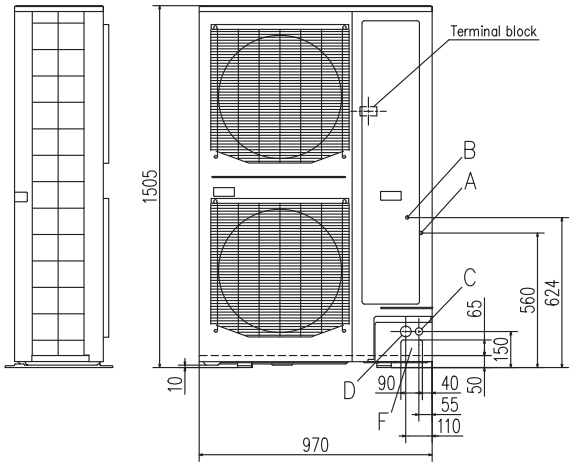

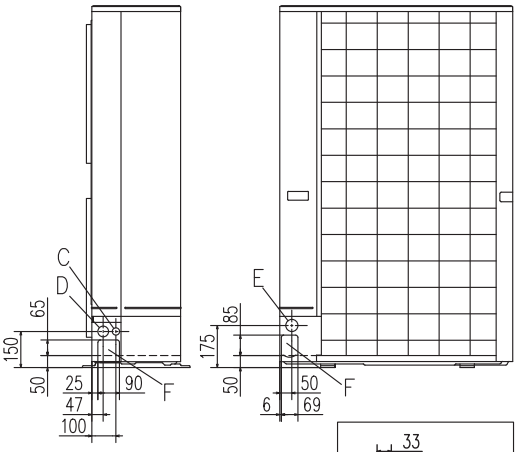

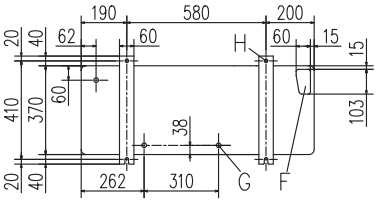

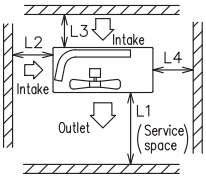

Minimum installation space

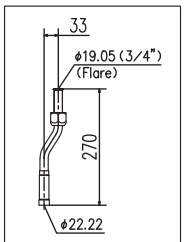

Accessory pipe
(Used only by FDC280KXZPE1)

Mark	Content	
A	Service valve connection of the attached connecting pipe (gas side)	ø19.05 (3/4") (Flare)
B	Service valve connection (liquid side)	ø9.52 (3/8") (Flare)
C	Cable draw-out hole (front · side)	ø30 x 2places
D	Cable draw-out hole (front · side)	ø45 x 2places
E	Cable draw-out hole (back)	ø50
F	Pipe/cable draw-out hole	4places
G	Drain discharge hole	ø20 x 3places
H	Anchor bolt hole	M10 x 4places

Notes:
(1) It must not be surrounded by walls on the four sides.
(2) The unit must be fixed with anchor bolts.
An anchor bolt must not protrude more than 15mm.
(3) Where the unit is subject to strong winds, lay it in such a direction that the blower outlet faces perpendicularly to the dominant wind direction.
(4) Leave 1m or more space above the unit.
(5) A wall in front of the blower outlet must not exceed the units height.
(6) The model name label is attached on the lower right corner of the front panel.
(7) Connect the Service valve with local pipe by using the pipe of the attachment.
(Gas side only) (Accessory pipe is used only by FDC280KXZPE1)
(8) Regarding attaching the pipe of accessories, refer to an attached installation manual.

KXZ2 Heat pump systems

10, 12HP (28.0kW, 33.5kW)

Model No.	Nominal Cooling Capacity
FDC280KXZE2	28.0kW
FDC335KXZE2	33.5kW

NEW

Blue Fin

Uniform footprint of models allows continuous side-by-side installation

- The new KXZ2 series has a layered design and a refined new form.
- Connect up to 44 indoor units/up to 200% capacity.

Increased number of connectable units		
Size	KXZE1	KXZE2
280	1-24	1-37
335	1-29	1-44

Increased max connection capacity		
Size	KXZE1	KXZE2
280	50-130%	50-200%
335	50-130%	50-200%

- High efficiency with EER up to 3.86.
- Extended external static pressure 50Pa to Max 85Pa.

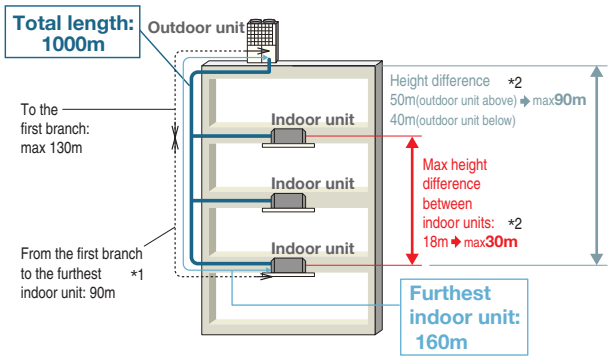

*1 The difference between the longest and the shortest indoor unit piping from the first branch must be within 40m. (MAX85m)

*2 It is necessary to change the setting corresponding to each height difference in installation. The range of use is also defferent.

Range of operation

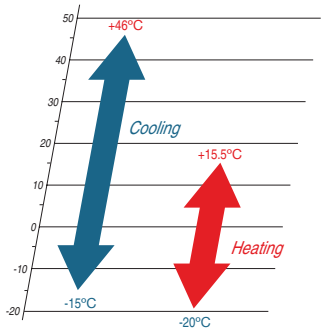

Specifications

Item			Model	FDC280KXZE2	FDC335KXZE2
Nominal horse power				10HP	12HP
Power source				3 Phase 380-415V, 50Hz	
Starting current			A	5	
Max current			A	20.1	
Nominal capacity	Cooling		kW	28.0	33.5
	Heating			31.5	37.5
Electrical characteristics	Power consumption	Cooling	kW	7.25	8.98
		Heating		7.41	9.03
Exterior dimensions	HxWxD		mm	1697x1350x720	
Net weight			kg	288	
Sound pressure level	Cooling/Heating		dB(A)	56/57	63/62
Refrigerant	Type / GWP			R410A / 2088	
	Charge		kg/TCO2Eq	11.0 / 22.968	
Refrigerant piping size	Liquid line		mm(in)	ø9.52(3/8")	ø12.7(1/2")
	Gas line			ø22.22(7/8")	ø25.4(1") [ø22.22(7/8")]
Capacity connection			%	50~200	
Number of connectable indoor units				37	44

1. The data are measured under the following conditions(ISO-T1, H1). Cooling: Indoor temp. of 27ºCDB, 19ºCWB, and outdoor temp. of 35ºCDB. Heating: Indoor temp. of 20ºCDB, and outdoor temp. of 7ºCDB, 6ºCWB.
2. Sound pressure level indicates the value in an anechoic chamber. During operation these values are somewhat higher due to ambient conditions.
3. 'tonne(s) of CO_2 equivalent' means a quantity of greenhouse gases- expressed as the product of the weight of the greenhouse gases in metric tonnes and of their global warming potential.
4. [ ] : Pipe sizes applicable to European installations are shown in parentheses.

Dimensions

All measurements in mm.

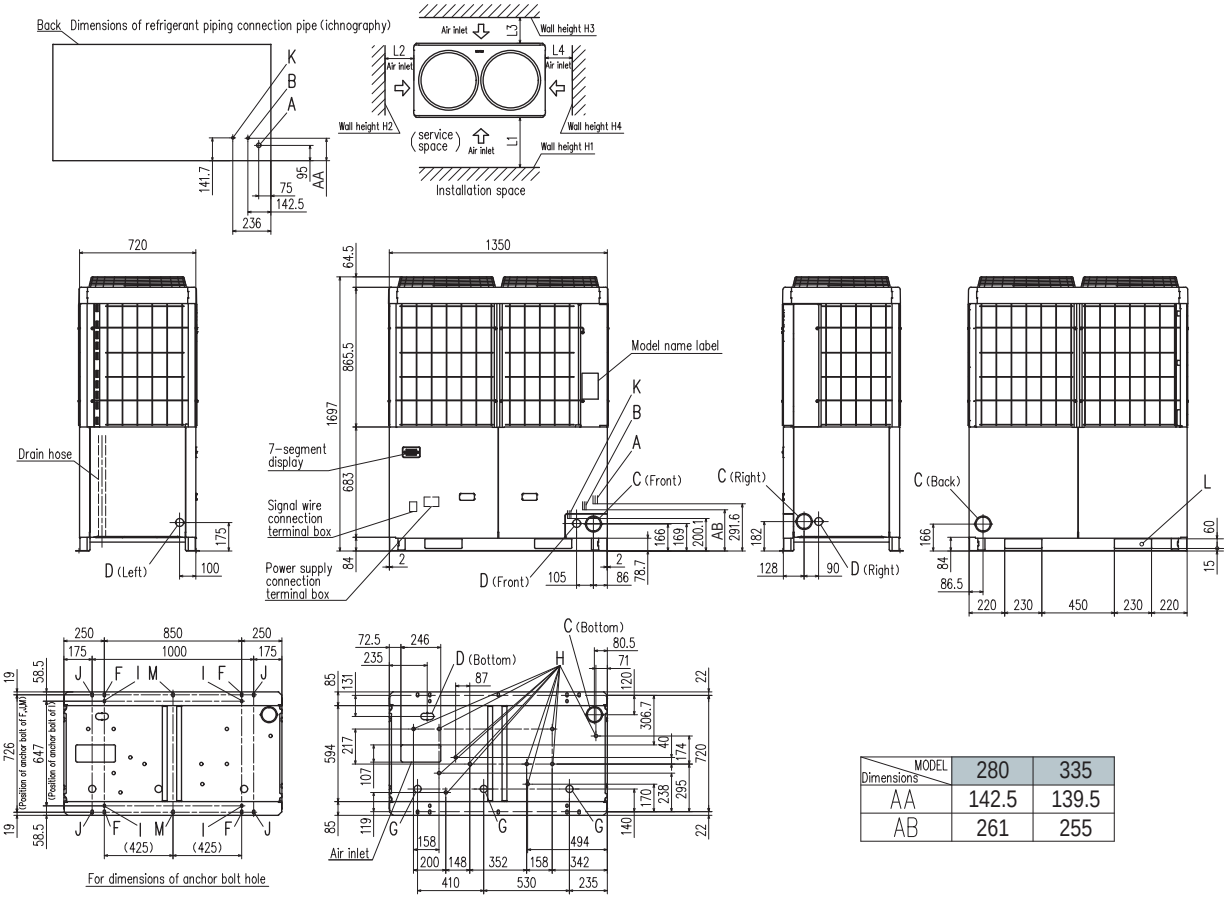

Dimensions \ MODEL	280	335
AA	142.5	139.5
AB	261	255

Mark	Content	280	335
A	Refrigerant gas piping connection pipe	ø22.22(Brazing)	ø25.4(Brazing)
B	Refrigerant liquid piping connection pipe	ø9.52(Flare)	ø12.7(Flare)
C	Refrigerant piping exit hole	ø88(or ø100)	
D	Power supply entry hole	ø50 (right · left · front), long hole 40 x 80 (bottom)	
F	Anchor bolt hole	M10 x 4 places	
G	Drain waste water hose hole	ø45 x 3 places	
H	Drain hole	ø20 x 11 places	
K	Refrigerant oil equalization piping connection pipe	ø9.52(Flare)	
L	Carrying in or hole for hanging	230 x 60	

Installation example		
Dimensions	1	2
L_1	500	Open
L_2	10(30)	10(30)
L_3	100	100
L_4	10(30)	Open
H_1	1500	Open
H_2	No limit	No limit
H_3	1000	No limit
H_4	No limit	Open

() :In case it is the promised installation location that the outdoor unit is used on conditions with the ambient temperature of 43ºC or more.

When more than one unit is installed

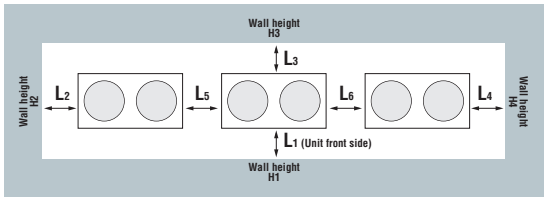

Installation example		
Dimensions	1	2
L_1	500	Open
L_2	10(30)	200
L_3	100	300
L_4	10(30)	Open
L_5	10(30)	400
L_6	10(30)	400
H_1	1500	Open
H_2	No limit	No limit
H_3	1000	No limit
H_4	No limit	Open

KXZ2 Heat pump systems
14 ~ 20HP (40.0kW~56.0kW)

NEW

Blue Fin

Model No.	Nominal Cooling Capacity
FDC400KXZE2	40.0kW
FDC450KXZE2	45.0kW
FDC475KXZE2	47.5kW
FDC500KXZE2	50.0kW
FDC560KXZE2	56.0kW

- The new KXZ2 series has a layered design and a refined new form.
- Connect up to 59 indoor units/up to 160% capacity.(FDC400-450:200%.)

Increased number of connectable units		
Size	KXZE1	KXZE2
400	1-34	1-53
450	1-39	1-60
475	1-41	1-50
500	1-43	1-53
560	1-48	1-59

Increased max connection capacity		
Size	KXZE1	KXZE2
400	50-130%	50-200%
450	50-130%	50-200%
475	50-130%	50-160%
500	50-130%	50-160%
560	50-130%	50-160%

- High efficiency with EER up to 3.64.
- Extended external static pressure 50Pa to Max 85Pa.

Uniform footprint of all models allows continuous side-by-side installation

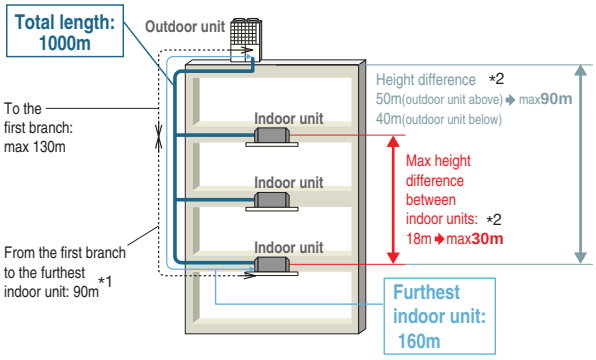

*1 The difference between the longest and the shortest indoor unit piping from the first branch must be within 40m. (MAX85m)

*2 It is necessary to change the setting corresponding to each height difference in installation. The range of use is also defferent.

Range of operation

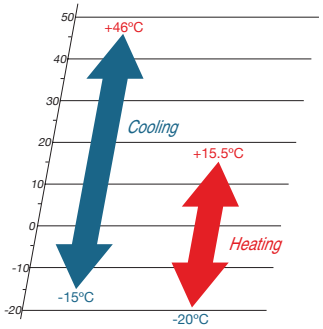

Specifications

Item			Model	FDC400KXZE2	FDC450KXZE2	FDC475KXZE2	FDC500KXZE2	FDC560KXZE2
Nominal horse power				14HP	16HP	17HP	18HP	20HP
Power source				3 Phase 380-415V, 50Hz				
Starting current			A	5		8		
Max current			A	32.0		40.2		
Nominal capacity	Cooling		kW	40.0	45.0	47.5	50.0	56.0
	Heating			45.0	50.0	53.0	56.0	63.0
Electrical characteristics	Power consumption	Cooling	kW	10.98	13.98	13.97	14.01	17.50
		Heating		10.23	12.50	12.99	13.56	16.15
Exterior dimensions	HxWxD		mm	2052x1350x720				
Net weight			kg	332		378		
Sound pressure level	Cooling/Heating		dB(A)	60/62	61/62	61/61	61/62	63/64
Refrigerant	Type / GWP			R410A / 2088				
	Charge		kg/TCO2Eq	11.5 / 24.012				
Refrigerant piping size	Liquid line		mm(in)	ø12.7(1/2")				
	Gas line			ø25.4(1") [ø28.58(1 1/8")]	ø28.58(1 1/8")			
Capacity connection			%	50~200		50~160		
Number of connectable indoor units				53	60	50	53	59

1. The data are measured under the following conditions(ISO-T1, H1). Cooling: Indoor temp. of 27ºCDB, 19ºCWB, and outdoor temp. of 35ºCDB. Heating: Indoor temp. of 20ºCDB, and outdoor temp. of 7ºCDB, 6ºCWB.
2. Sound pressure level indicates the value in an anechoic chamber. During operation these values are somewhat higher due to ambient conditions.
3. 'tonne(s) of CO_2 equivalent' means a quantity of greenhouse gases- expressed as the product of the weight of the greenhouse gases in metric tonnes and of their global warming potential.
4. [ ] : Pipe sizes applicable to European installations are shown in parentheses.

Dimensions

All measurements in mm.

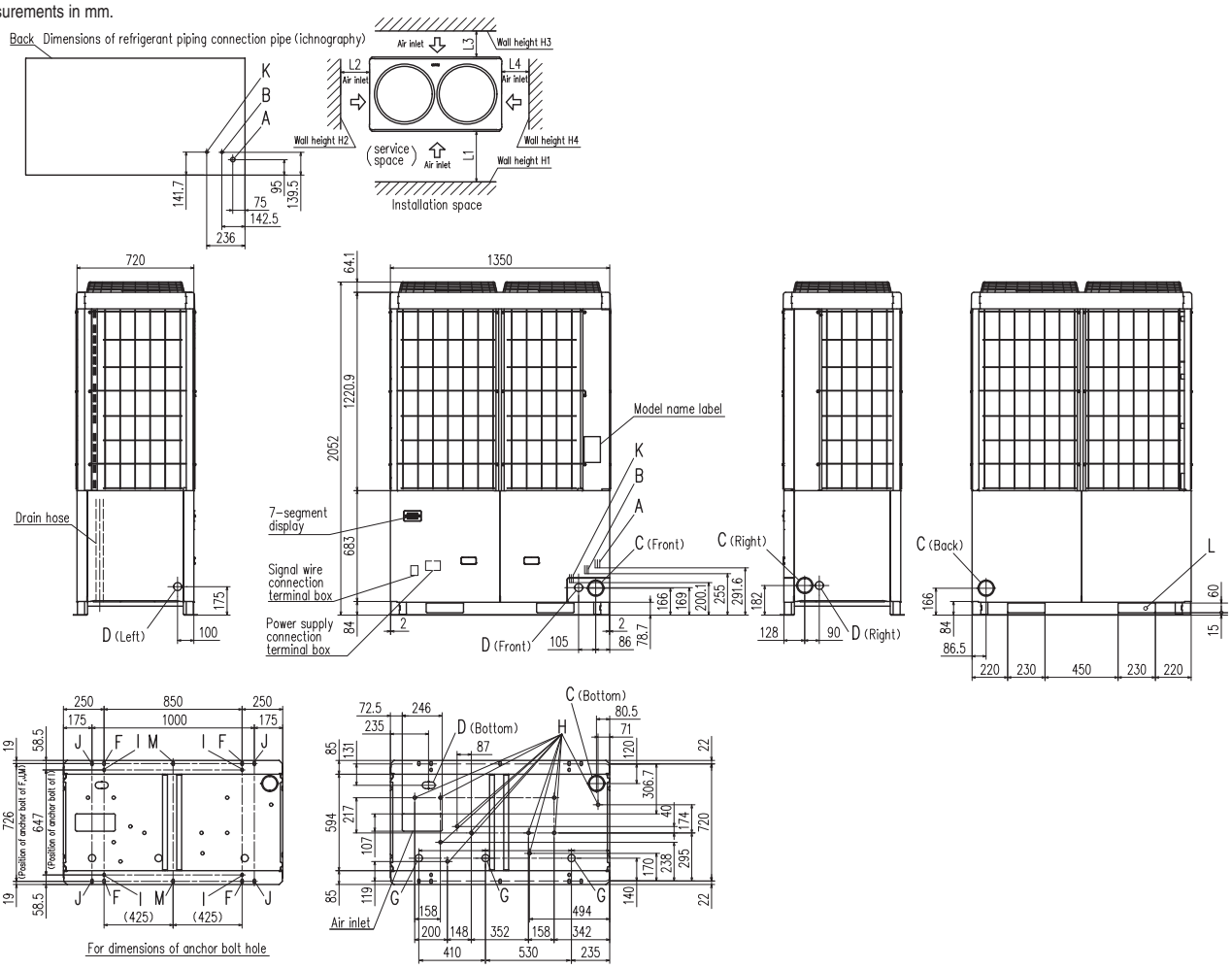

Mark	Content	400	450, 475, 500, 560
A	Refrigerant gas piping connection pipe	ø25.4(Brazing)	ø28.58(Brazing)
B	Refrigerant liquid piping connection pipe	ø12.7(Flare)	
C	Refrigerant piping exit hole	ø88(or ø100)	
D	Power supply entry hole	ø50 (right · left · front), long hole 40 x 80 (bottom)	
F	Anchor bolt hole	M10 x 4 places	
G	Drain waste water hose hole	ø45 x 3 places	
H	Drain hole	ø20 x 11 places	
K	Refrigerant oil equalization piping connection pipe	ø9.52(Flare)	
L	Carrying in or hole for hanging	230 x 60	

Installation example		
Dimensions	1	2
L_1	500	Open
L_2	10(30)	10(30)
L_3	100	100
L_4	10(30)	Open
H_1	1500	Open
H_2	No limit	No limit
H_3	1000	No limit
H_4	No limit	Open

() :In case it is the promised installation location that the outdoor unit is used on conditions with the ambient temperature of 43ºC or more.

When more than one unit is installed

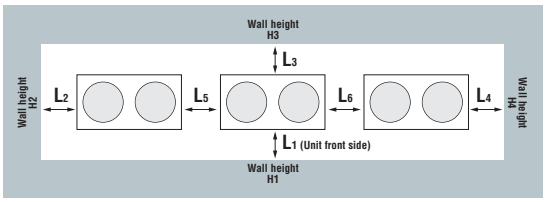

Installation example		
Dimensions	1	2
L_1	500	Open
L_2	10(30)	200
L_3	100	300
L_4	10(30)	Open
L_5	10(30)	400
L_6	10(30)	400
H_1	1500	Open
H_2	No limit	No limit
H_3	1000	No limit
H_4	No limit	Open

KXZ2 Heat pump systems
22, 24HP (61.5kW, 67.0kW)

Model No.	Nominal Cooling Capacity
FDC615KXZE2	61.5kW
FDC670KXZE2	67.0kW

NEW

- The new KXZ2 series has a layered design and a refined new form.
- Connect up to 71 indoor units/up to 160% capacity.

Increased number of connectable units		
Size	KXZE1	KXZE2
615	2-53	2-65
670	2-58	2-71

Increased max connection capacity		
Size	KXZE1	KXZE2
615	50-130%	50-160%
670	50-130%	50-160%

- High efficiency with EER up to 3.78.
- Extended external static pressure 50Pa to Max 85Pa.

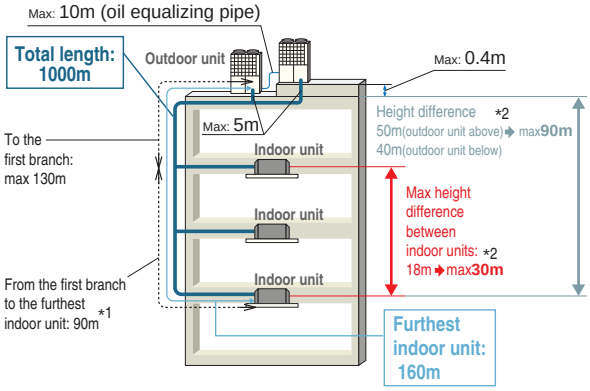

*1 The difference between the longest and the shortest indoor unit piping from the first branch must be within 40m. (MAX85m)
*2 It is necessary to change the setting corresponding to each height difference in installation. The range of use is also defferent..

Range of operation

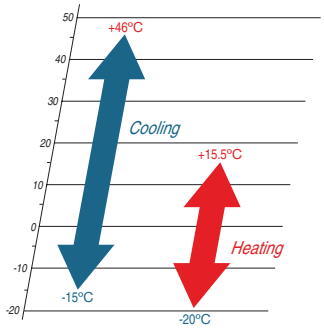

Specifications

Exterior dimension : Please refer to page 43.

Item			Model	FDC615KXZE2	FDC670KXZE2
Combination (FDC)				280KXZE2	335KXZE2
				335KXZE2	335KXZE2
Nominal horse power				22HP	24HP
Power source				3 Phase 380-415V, 50Hz	
Starting current			A	10	
Max current			A	40.2	
Nominal capacity	Cooling		kW	61.5	67.0
	Heating			69.0	75.0
Electrical characteristics	Power consumption	Cooling	kW	16.24	17.96
		Heating		16.44	18.06
Exterior dimensions	HxWxD		mm	1697x2700x720	
Net weight			kg	576	
Refrigerant charge	R410A		kg	11.0x2	
Refrigerant piping size	Liquid line		mm(in)	ø12.7(1/2")	
	Gas line			ø28.58(1 1/8")	
Capacity connection			%	50~160	
Number of connectable indoor units				65	71

1. The data are measured under the following conditions(ISO-T1,H1). Cooling: Indoor temp. of 27ºCDB, 19ºCWB, and outdoor temp. of 35ºCDB. Heating: Indoor temp. of 20ºCDB, and outdoor temp. of 7ºCDB, 6ºCWB.
2.Sound pressure level indicates the value in an anechoic chamber. During operation these values are somewhat higher due to ambient conditions.

KXZ2 Heat pump systems
26 ~ 40HP (73.5kW~112.0kW)

Blue Fin

Model No.	Nominal Cooling Capacity
FDC735KXZE2	73.5kW
FDC800KXZE2	80.0kW
FDC850KXZE2	85.0kW
FDC900KXZE2	90.0kW
FDC950KXZE2	95.0kW
FDC1000KXZE2	100.0kW
FDC1060KXZE2	106.0kW
FDC1120KXZE2	112.0kW

NEW

FDC735

- The new KXZ2 series has a layered design and a refined new form.
- Connect up to 80 indoor units/up to 160% capacity. (FDC1000-1120:130%)

Increased namber of connectible units		
Size	KXZE1	KXZE2
735	2-63	2-78
800	2-69	2-80
850	2-73	2-80
900	2-78	2-80

Increased max connection capacity		
Size	KXZE1	KXZE2
735	50-130%	50-160%
800	50-130%	50-160%
850	50-130%	50-160%
900	50-130%	50-160%
950	50-130%	50-160%

- High efficiency with EER up to 3.68.
- Extended external static pressure 50Pa to Max 85Pa.
- Industry leading total piping length up to 1000m and a maximum height difference between indoor units has been increased to maximum of 30m.
- Wide range of operation.

FDC800～1120

Specifications

Exterior dimension : Please refer to page 43, 45.

Item			Model	FDC735KXZE2	FDC800KXZE2	FDC850KXZE2	FDC900KXZE2	FDC950KXZE2	FDC1000KXZE2	FDC1060KXZE2	FDC1120KXZE2
Combination (FDC)				335KXZE2	400KXZE2	400KXZE2	450KXZE2	475KXZE2	500KXZE2	500KXZE2	560KXZE2
				400KXZE2	400KXZE2	450KXZE2	450KXZE2	475KXZE2	500KXZE2	560KXZE2	560KXZE2
Nominal horse power				26HP	28HP	30HP	32HP	34HP	36HP	38HP	40HP
Power source				3 Phase 380-415V, 50Hz							
Starting current			A	10				16			
Max current			A	52.1	64.0			80.4			
Nominal capacity	Cooling		kW	73.5	80.0	85.0	90.0	95.0	100.0	106.0	112.0
	Heating			82.5	90.0	95.0	100.0	106.0	112.0	119.0	126.0
Electrical characteristics	Power consumption	Cooling	kW	19.96	21.96	24.96	27.95	27.94	28.02	31.51	35.00
		Heating		19.26	20.45	22.73	25.00	25.98	27.12	29.71	32.31
Exterior dimensions	HxWxD		mm	2052x2700x720							
Net weight			kg	620	664			756			
Refrigerant charge	R410A		kg	11.0+11.5	11.5x2						
Refrigerant piping size	Liquid line		mm(in)	ø15.88(5/8")						ø19.05(3/4")	
	Gas line			ø31.75(1 1/4") [ø34.92(1 3/8")]					ø38.1(1 1/2") [ø34.92(1 3/8")]		
Capacity connection			%	50~160					50~130		
Number of connectable indoor units				78	80						

1.The data are measured under the following conditions(ISO-T1,H1). Cooling: Indoor temp. of 27ºCDB, 19ºCWB, and outdoor temp. of 35ºCDB. Heating: Indoor temp. of 20ºCDB, and outdoor temp. of 7ºCDB, 6ºCWB.
2.Sound pressure level indicates the value in an anechoic chamber. During operation these values are somewhat higher due to ambient conditions.
3.[ ] : Pipe sizes applicable to European installations are shown in parentheses.

KXZ2 Heat pump systems
42 ~ 48HP (120.kW~135.0kW)

Blue Fin

Model No.	Nominal Cooling Capacity
FDC1200KXZE2	120.0kW
FDC1250KXZE2	125.0kW
FDC1300KXZE2	130.0kW
FDC1350KXZE2	135.0kW

NEW

- The new KXZ2 series has a layered design and a refined new form.
- Connect up to 80 indoor units/up to 130% capacity.
- High efficiency with EER up to 3.64.
- Extended external static pressure 50Pa to Max 85Pa.

FDC1200～1350

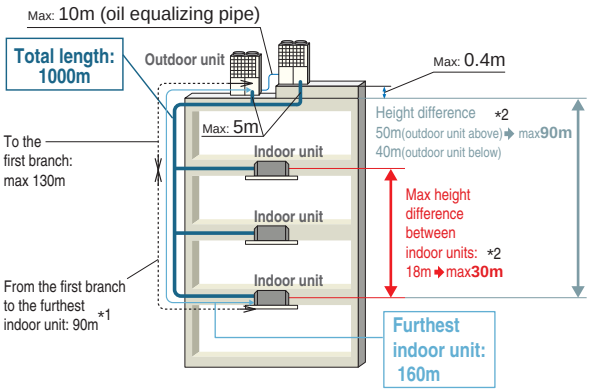

*1 The difference between the longest and the shortest indoor unit piping from the first branch must be within 40m. (MAX85m)

*2 It is necessary to change the setting corresponding to each height difference in installation. The range of use is also defferent..

Range of operation

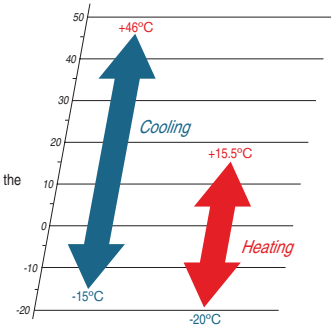

Specifications

Exterior dimension : Please refer to page 45.

Item			Model	FDC1200KXZE2	FDC1250KXZE2	FDC1300KXZE2	FDC1350KXZE2
Combination (FDC)				400KXZE2	400KXZE2	400KXZE2	450KXZE2
				400KXZE2	400KXZE2	450KXZE2	450KXZE2
				400KXZE2	450KXZE2	450KXZE2	450KXZE2
Nominal horse power				42HP	44HP	46HP	48HP
Power source				3 Phase 380-415V, 50Hz			
Starting current			A	15			
Max current			A	96.0			
Nominal capacity	Cooling		kW	120.0	125.0	130.0	135.0
	Heating			135.0	140.0	145.0	150.0
Electrical characteristics	Power consumption	Cooling	kW	32.94	35.94	38.93	41.93
		Heating		30.68	32.95	35.23	37.50
Exterior dimensions	HxWxD		mm	2052x4050x720			
Net weight			kg	996			
Refrigerant charge	R410A		kg	11.5x3			
Refrigerant piping size	Liquid line		mm(in)	ø19.05(3/4")			
	Gas line			ø38.1(1 1/2") [ø34.92(1 3/8")]			
Capacity connection			%	50~130			
Number of connectable indoor units				80			

1. The data are measured under the following conditions(ISO-T1,H1). Cooling: Indoor temp. of 27ºCDB, 19ºCWB, and outdoor temp. of 35ºCDB. Heating: Indoor temp. of 20ºCDB, and outdoor temp. of 7ºCDB, 6ºCWB.
2. Sound pressure level indicates the value in an anechoic chamber. During operation these values are somewhat higher due to ambient conditions.
3. [ ] : Pipe sizes applicable to European installations are shown in parentheses.

KXZ2 Heat pump systems
50 ~ 60HP (142.5kW~168.0kW)

Blue Fin

Model No.	Nominal Cooling Capacity
FDC1425KXZE2	142.5kW
FDC1450KXZE2	145.0kW
FDC1500KXZE2	150.0kW
FDC1560KXZE2	156.0kW
FDC1620KXZE2	162.0kW
FDC1680KXZE2	168.0kW

NEW

- The new KXZ2 series has a layered design and a refined new form.
- Connect up to 80 indoor units/up to 130% capacity.
- High efficiency with EER up to 3.40.
- Extended external static pressure 50Pa to Max 85Pa.

FDC1425～1680

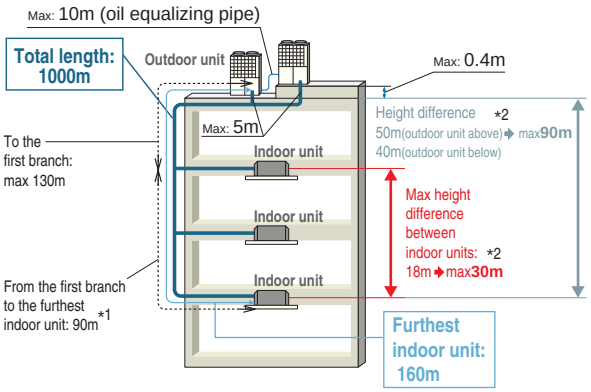

*1 The difference between the longest and the shortest indoor unit piping from the first branch must be within 40m. (MAX85m)

*2 It is necessary to change the setting corresponding to each height difference in installation. The range of use is also defferent..

Range of operation

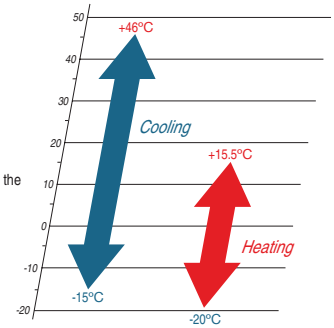

Specifications

Exterior dimension : Please refer to page 45.

Item			Model	FDC1425KXZE2	FDC1450KXZE2	FDC1500KXZE2	FDC1560KXZE2	FDC1620KXZE2	FDC1680KXZE2
Combination (FDC)				475KXZE2	475KXZE2	500KXZE2	500KXZE2	500KXZE2	560KXZE2
				475KXZE2	475KXZE2	500KXZE2	500KXZE2	560KXZE2	560KXZE2
				475KXZE2	500KXZE2	500KXZE2	560KXZE2	560KXZE2	560KXZE2
Nominal horse power				50HP	52HP	54HP	56HP	58HP	60HP
Power source				3 Phase 380-415V, 50Hz					
Starting current			A	24					
Max current			A	120.6					
Nominal capacity	Cooling		kW	142.5	145.0	150.0	156.0	162.0	168.0
	Heating			159.0	162.0	168.0	175.0	182.0	189.0
Electrical characteristics	Power consumption	Cooling	kW	41.91	41.95	42.03	45.52	49.01	52.50
		Heating		38.97	39.54	40.68	43.27	45.87	48.46
Exterior dimensions	HxWxD		mm	2052x4050x720					
Net weight			kg	1134					
Refrigerant charge	R410A		kg	11.5x3					
Refrigerant piping size	Liquid line		mm(in)	ø19.05(3/4")					
	Gas line			ø38.1(1 1/2") [ø34.92(1 3/8")]					
Capacity connection			%	50~130					
Number of connectable indoor units				80					

1. The data are measured under the following conditions(ISO-T1,H1). Cooling: Indoor temp. of 27ºCDB, 19ºCWB, and outdoor temp. of 35ºCDB. Heating: Indoor temp. of 20ºCDB, and outdoor temp. of 7ºCDB, 6ºCWB.
2. Sound pressure level indicates the value in an anechoic chamber. During operation these values are somewhat higher due to ambient conditions.
3. [ ] : Pipe sizes applicable to European installations are shown in parentheses.

KXZ2 Hi-COP combination systems
20 ~ 40HP(56.0kW~113.5kW)

Model No.		Nominal Cooling Capacity
FDC560KXZXE2	(FDC280+FDC280)	56.0kW
FDC850KXZXE2	(FDC280+FDC280+FDC280)	84.0kW
FDC900KXZXE2	(FDC280+FDC280+FDC335)	89.5kW
FDC950KXZXE2	(FDC280+FDC335+FDC335)	95.0kW
FDC1000KXZXE2	(FDC335+FDC335+FDC335)	100.5kW
FDC1060KXZXE2	(FDC280+FDC335+FDC400)	107.0kW
FDC1120KXZXE2	(FDC335+FDC400+FDC400)	113.5kW

NEW

Blue Fin

- The new KXZ2 series has a layered design and a refined new form.
- This series can connect indoor unit capacity up to 160%. (FDC1000-1120:130%)
- High efficiency with EER up to 3.86.
- Extended external static pressure 50Pa to Max 85Pa.

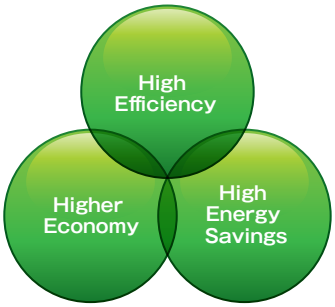

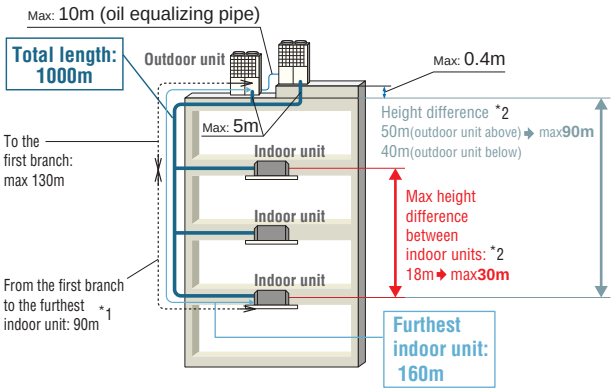

*1 The difference between the longest and the shortest indoor unit piping from the first branch must be within 40m. (MAX85m)
*2 It is necessary to change the setting corresponding to each height difference in installation.The range of use is also different.

Range of operation

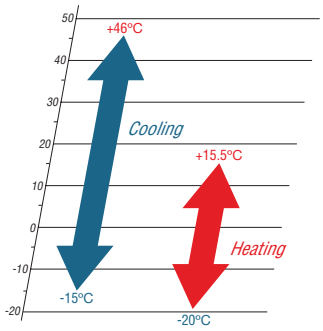

FDC560

FDC850 - 1000

FDC1060

FDC1120

Specifications

Item			Model	FDC560KXZXE2	FDC850KXZXE2	FDC900KXZXE2
Combination (FDC)				280KXZE2	280KXZE2	280KXZE2
				280KXZE2	280KXZE2	280KXZE2
				-	280KXZE2	335KXZE2
Nominal horse power				20HP	30HP	32HP
Power source				3 Phase 380-415V, 50Hz		
Starting current			A	10	15	
Max current			A	40.2	60.3	
Nominal capacity	Cooling		kW	56.0	84.0	89.5
	Heating			63.0	94.5	100.5
Electrical characteristics	Power consumption	Cooling	kW	14.51	21.76	23.49
		Heating		14.82	22.23	23.85
Exterior dimensions	HxWxD		mm	1697x2700x720	1697x4050x720	
Net weight			kg	576	864	
Refrigerant charge	R410A		kg	11.0x2	11.0x3	
Refrigerant piping size	Liquid line		mm(in)	ø12.7(1/2")	ø15.88(5/8")	
	Gas line			ø28.58(1 1/8")	ø31.75(1 1/4") [ø34.92(1 3/8")]	
Capacity connection			%	80~160		
Number of connectable indoor units				59	80	

Item			Model	FDC950KXZXE2	FDC1000KXZXE2	FDC1060KXZXE2	FDC1120KXZXE2
Combination (FDC)				280KXZE2	335KXZE2	335KXZE2	335KXZE2
				335KXZE2	335KXZE2	335KXZE2	400KXZE2
				335KXZE2	335KXZE2	400KXZE2	400KXZE2
Nominal horse power				34HP	36HP	38HP	40HP
Power source				3 Phase 380-415V, 50Hz			
Starting current			A	15			
Max current			A	60.3		72.2	84.1
Nominal capacity	Cooling		kW	95.0	100.5	107.0	113.5
	Heating			106.5	112.5	120.0	127.5
Electrical characteristics	Power consumption	Cooling	kW	25.22	26.94	28.94	30.94
		Heating		25.47	27.09	28.29	29.48
Exterior dimensions	HxWxD		mm	1697x4050x720		2052x4050x720	
Net weight			kg	864		908	952
Refrigerant charge	R410A		kg	11.0x3		11.0x2+11.5	11.0+11.5x2
Refrigerant piping size	Liquid line		mm(in)	ø15.88(5/8")		ø19.05(3/4")	
	Gas line			ø31.75(1 1/4") [ø34.92(1 3/8")]	ø38.1(1 1/2") [ø34.92(1 3/8")]		
Capacity connection			%	80~160	80~130		
Number of connectable indoor units				80			

1. The data are measured under the following conditions(ISO-T1,H1). Cooling: Indoor temp. of 27ºCDB, 19ºCWB, and outdoor temp. of 35ºCDB. Heating: Indoor temp. of 20ºCDB, and outdoor temp. of 7ºCDB, 6ºCWB.
2. Sound pressure level indicates the value in an anechoic chamber. During operation these values are somewhat higher due to ambient conditions.
3. [ ] : Pipe sizes applicable to European installations are shown in parentheses.

Dimensions

Please refer to page 43, 45.

KXZ2 Heat recovery systems - for simultaneous heating and cooling

The heat recovery systems operate with 3 inter-connecting pipes, commonly referred to as a '3-pipe system'.
The systems provide both heating and cooling operations simultaneously to individual indoor units according to room conditions or user requirements.
The systems incorporate highly sophisticated controls transferring heat load energy from the entire building to provide an efficient, comfortable heating and cooling environment.

The range starts from a cooling capacity of 8 HP (22.4 kW) and expands up to 24 HP (67.0kW) using a single outdoor unit. Outdoor units can also be used as a modular system (twin or triple) providing up to 60 HP (168.0 kW) of cooling capacity.

Heat recovery systems

The system interconnecting pipework has a unique arrangement, with two of the interconnecting pipes routed through a PFD Distribution Controller, and the third pipe connected directly to each indoor unit from the main pipe run. This reduces installation time, and the number of brazed connections on site. The PFD Distribution Controllers are available for single connection, or as a combined PFD 4-way connection, with each connected unit having independent cooling or heating operation.

During defrosting or during automatic protection of a compressor, which is activated every several hours in heating operation, heating operation temporarily stops and restarts after some period. The series has the same automatic protection of compressor in cooling operation also. During this protection period air flow only comes on and cooling operation restarts after some period.

These models are not suitable for year round cooling applications -such as server rooms- especially in areas where the outdoor air temperature goes below 5°C.

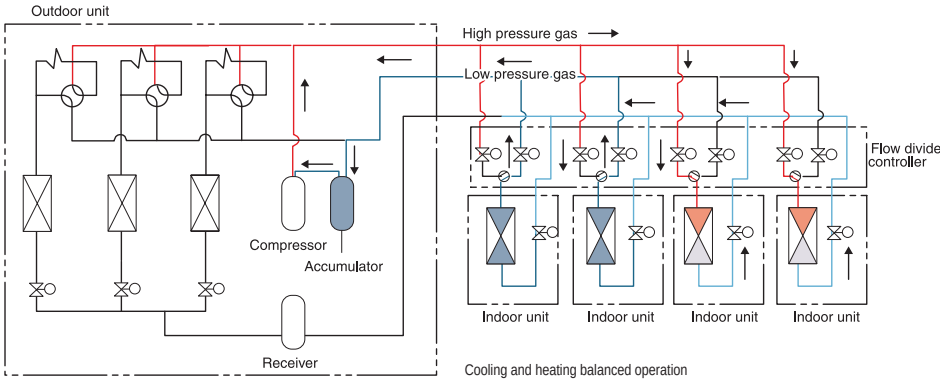

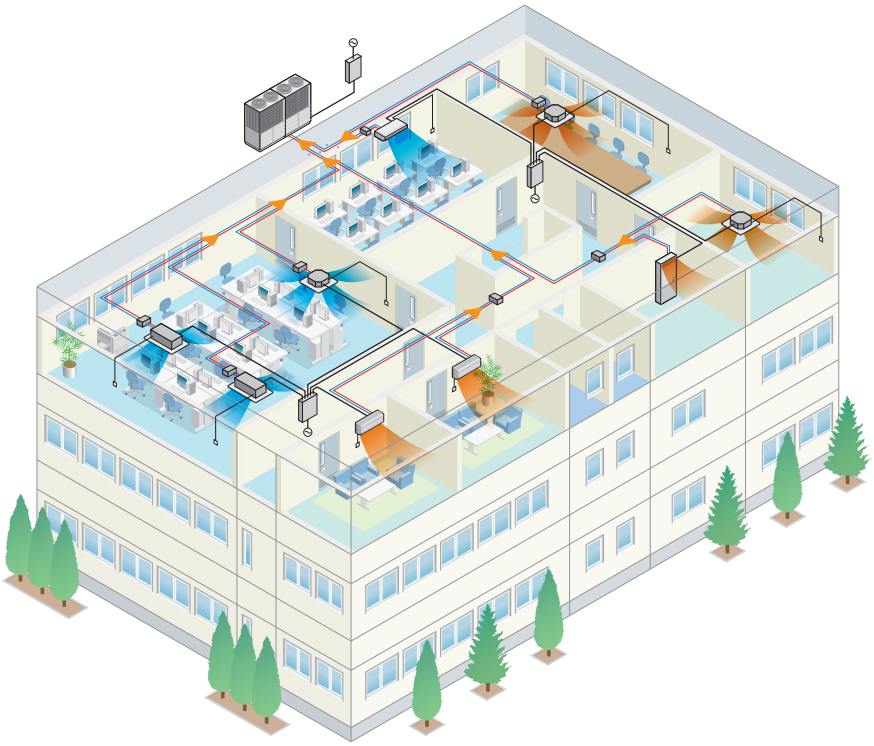

Heat recovery systems KXZRE2 NEW

FDC224~335

FDC400~670

22.4kW	28.0kW	33.5kW
8HP	10HP	12HP
FDC224KXZRE2	FDC280KXZRE2	FDC335KXZRE2

40.0kW	45.0kW	47.5kW	50.0kW	56.0kW	61.5kW	67.0kW
14HP	16HP	17HP	18HP	20HP	22HP	24HP
FDC400KXZRE2	FDC450KXZRE2	FDC475KXZRE2	FDC500KXZRE2	FDC560KXZRE2	FDC615KXZRE2	FDC670KXZRE2

FDC735

FDC800~1120

FDC1200~1680

73.5kW	80.0kW	85.0kW	90.0kW	95.0kW	100.0kW	106.0kW	112.0kW
26HP	28HP	30HP	32HP	34HP	36HP	38HP	40HP
FDC735KXZRE2	FDC800KXZRE2	FDC850KXZRE2	FDC900KXZRE2	FDC950KXZRE2	FDC1000KXZRE2	FDC1060KXZRE2	FDC1120KXZRE2
FDC335KXZRE2	FDC400KXZRE2	FDC400KXZRE2	FDC450KXZRE2	FDC475KXZRE2	FDC500KXZRE2	FDC500KXZRE2	FDC560KXZRE2
FDC400KXZRE2	FDC400KXZRE2	FDC450KXZRE2	FDC450KXZRE2	FDC475KXZRE2	FDC500KXZRE2	FDC560KXZRE2	FDC560KXZRE2

120.0kW	125.0kW	130.0kW	135.0kW	142.5kW	145.0kW	150.0kW	156.0kW	162.0kW	168.0kW
42HP	44HP	46HP	48HP	50HP	52HP	54HP	56HP	58HP	60HP
FDC1200KXZRE2	FDC1250KXZRE2	FDC1300KXZRE2	FDC1350KXZRE2	FDC1425KXZRE2	FDC1450KXZRE2	FDC1500KXZRE2	FDC1560KXZRE2	FDC1620KXZRE2	FDC1680KXZRE2
FDC400KXZRE2	FDC400KXZRE2	FDC400KXZRE2	FDC450KXZRE2	FDC475KXZRE2	FDC475KXZRE2	FDC500KXZRE2	FDC500KXZRE2	FDC500KXZRE2	FDC560KXZRE2
FDC400KXZRE2	FDC400KXZRE2	FDC450KXZRE2	FDC450KXZRE2	FDC475KXZRE2	FDC475KXZRE2	FDC500KXZRE2	FDC500KXZRE2	FDC560KXZRE2	FDC560KXZRE2
FDC400KXZRE2	FDC450KXZRE2	FDC450KXZRE2	FDC450KXZRE2	FDC475KXZRE2	FDC500KXZRE2	FDC500KXZRE2	FDC560KXZRE2	FDC560KXZRE2	FDC560KXZRE2

Heat recovery systems Hi-COP combination KXZRXE2 NEW

FDC450~670

45.0kW	50.0kW	56.0kW	61.5kW	67.0kW
16HP	18HP	20HP	22HP	24HP
FDC450KXZRXE2	FDC500KXZRXE2	FDC560KXZRXE2	FDC615KXZRXE2	FDC670KXZRXE2
FDC224KXZRE2	FDC224KXZRE2	FDC280KXZRE2	FDC280KXZRE2	FDC335KXZRE2
FDC224KXZRE2	FDC280KXZRE2	FDC280KXZRE2	FDC335KXZRE2	FDC335KXZRE2

FDC735~1000

73.5kW	80.0kW	85.0kW	90.0kW	95.0kW	100.0kW
26HP	28HP	30HP	32HP	34HP	36HP
FDC735KXZRXE2	FDC800KXZRXE2	FDC850KXZRXE2	FDC900KXZRXE2	FDC950KXZRXE2	FDC1000KXZRXE2
FDC224KXZRE2	FDC224KXZRE2	FDC280KXZRE2	FDC280KXZRE2	FDC280KXZRE2	FDC335KXZRE2
FDC224KXZRE2	FDC280KXZRE2	FDC280KXZRE2	FDC280KXZRE2	FDC335KXZRE2	FDC335KXZRE2
FDC280KXZRE2	FDC280KXZRE2	FDC280KXZRE2	FDC335KXZRE2	FDC335KXZRE2	FDC335KXZRE2

Heat recovery features

High efficiency in simultaneous cooling and heating mode

Highly efficient operation mode is automatically determined inside the refrigerant system during simultaneous cooling and heating operation.
Heat recovery efficiency is maximized by this control and Max COP 9.0 (*) is achieved during operation with simultaneous cooling and heating.

* Conditions for simultaneous cooling and heating (Our estimation in 8HP operation and the following conditions: Temperature outside the room DB16°C/WB12°C, temperature in the cooled room DB27°C/19°C, and temperature in the heated room DB20°C/WB14.5°C)

Energy efficiency in heat recovery mode

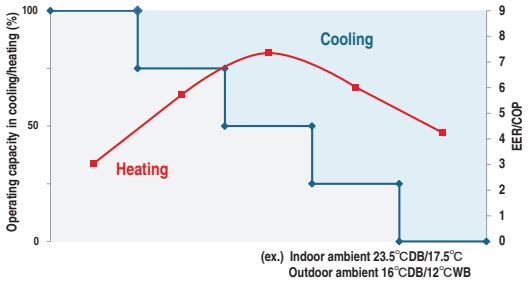

Max COP > 9.0

(Condition) FDC224KXZRE2
50% Indoor unit in cooling (27°CDB/19°C)
50% Indoor unit in heating (20°CDB/14.5°C)
Outdoor ambient 16°CDB/12°CWB

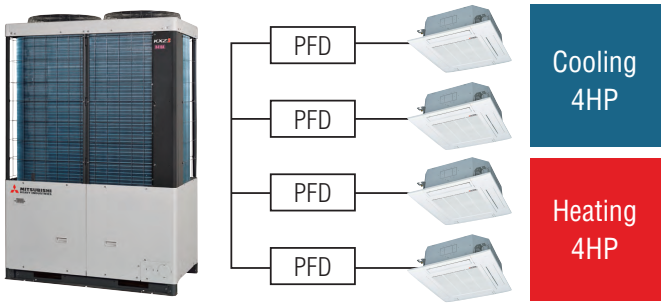

High Efficiency

The graphs below highlight the improved efficiencies of the KXZR and Hi-COP models compared to the previous models.

Comparison of EER in cooling mode

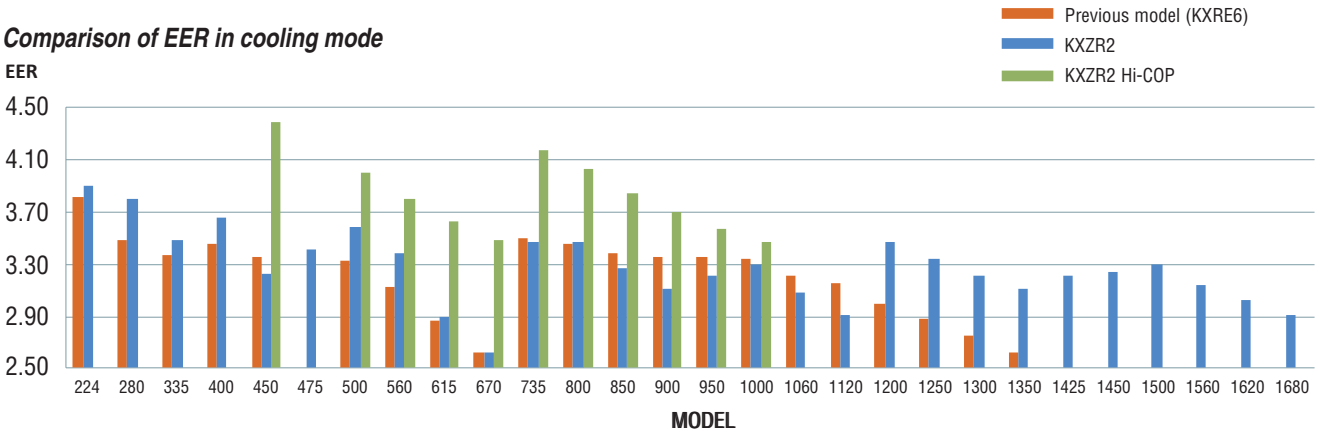

Comparison of COP in heating mode

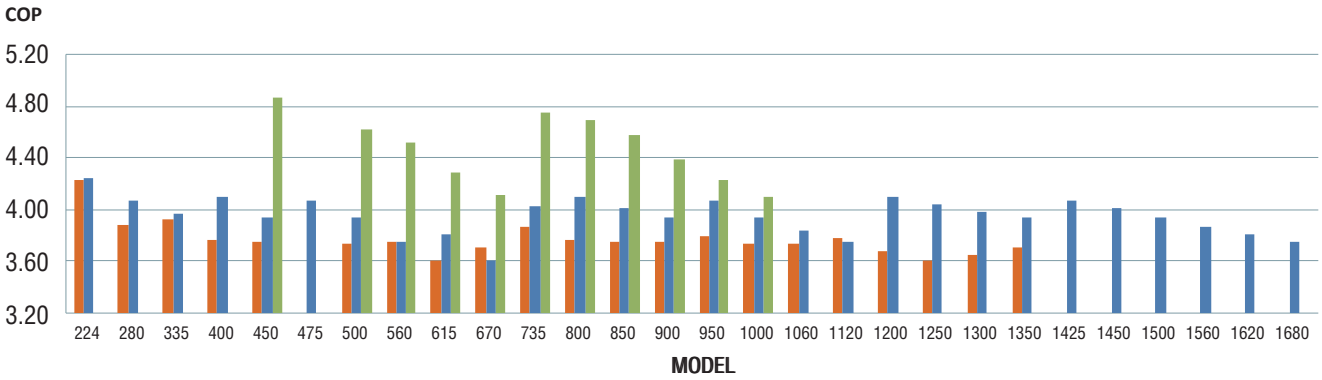

Continuous Heating Capacity Control (CHCC) -

Our CHCC defrosting control achieves more capacity than that of previous model in low ambient temperature condition.
Target pressure is controlled automatically before capacity drops, which makes longer period of heating operation and shorter defrosting time.
(*1) Patent is now under being applied. (*2) This control will be activated in specific condition. Please refer to the technical manual in detail.

Improved cooling capacity in low ambient temperature

Small split heat exchanger and pressure control make it possible for the outdoor unit to work in cooling operation even at low ambient temperature condition, which achieves more capacity in such low ambient condition as -5℃, compared to previous model.

In previous model, when high demand for heating and low cooling demand are required at the same time in low ambient temperature condition, pressure control is adjusted to keep more heating capacity than the cooling capacity.
Adopted heat exchanger and pressure control in KXZR series, has improved its capacity for both heating and cooling capacity at the same time. (*)

(*) Refrigerant system will prioritize required heating mode more than low cooling demand, in case most of the indoor units are operated in heating mode.

Blown air temperature in the cooled room

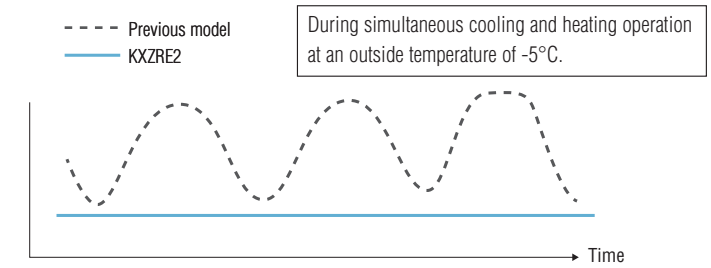

Improvement of the PFD controller noise level

Sound insulation box design specification, reducing the level of noises from the PFD controller generated due to the flow of refrigerant or other causes.

Sound insulation design

Indoor unit capacity connection

HP	KXZR	HP	KXZRX
8~16	200%	16	200%
17~34	160%	18~34	160%
36~60	130%	36	130%

Connectable indoor units

Up to 80 indoor units can be connected to the largest capacity outdoor unit, with a range of 15 types of exposed or concealed indoor unit, in several capacities, a choice of 82 indoor units is available.

- In case that capacity connection is more than 130%, additional charge of refrigerant is required on site.
- In case of 8-34HP of the systems, if one or more indoor units of FDK, FDFL,FDFU and/or FDFW series are connected to the system, the total connecting capacity of indoor units should not exceed 130%.

Wide Range of Operation

KXZR series permits an extensible system design with a heating range operation under a low temperature condition down to -20˚C and a cooling range operation up to 46˚C

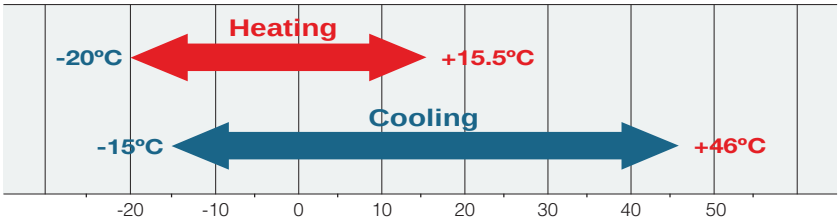

KXZ2 Heat recovery 3-pipe systems

8 ~ 12HP(22.4kW~33.5kW) - *for simultaneous heating and cooling*

Model No.	Nominal Cooling Capacity
FDC224KXZRE2	22.4kW
FDC280KXZRE2	28.0kW
FDC335KXZRE2	33.5kW

NEW

Blue Fin

Uniform footprint of models allows continuous side-by-side installation

- The new KXZ2 series has a layered design and a refined new form.
- Connect up to 44 indoor units / up to 200% capacity.
- High efficiency with EER up to 3.89.
- Industry leading total piping length up to 1000m and a maximum pipe run of 160m.

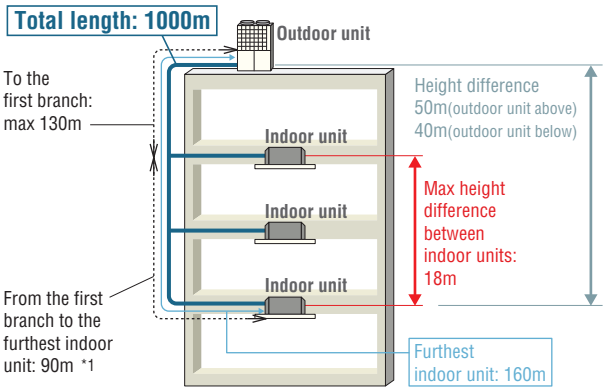

*1 The difference between the longest and the shortest indoor unit piping from the first branch must be within 40m.

Range of operation

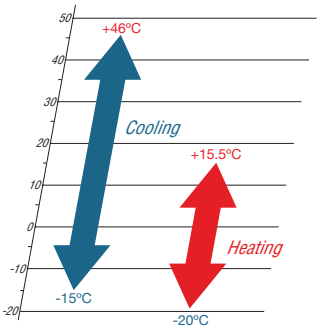

Specifications

Item			Model	FDC224KXZRE2	FDC280KXZRE2	FDC335KXZRE2
Nominal horse power				8HP	10HP	12HP
Power source				3 Phase 380-415V, 50Hz		
Starting current			A	5		
Max current			A	16.0	20.0	21.2
Nominal capacity	Cooling		kW	22.4	28.0	33.5
	Heating			22.4	28.0	33.5
Electrical characteristics	Power consumption	Cooling	kW	5.76	7.39	9.65
		Heating		5.27	6.86	8.44
Exterior dimensions	HxWxD		mm	1697x1350x720		
Net weight			kg	305		
Sound pressure level	Cooling/Heating		dB(A)	56/58	55/57	63/64
Refrigerant	Type / GWP			R410A / 2088		
	Charge		kg/TCO2Eq	11.5 / 24.012		
Refrigerant piping size	Liquid line		mm(in)	ø9.52(3/8")		ø12.7(1/2")
	Suction gas line			ø19.05(5/8")	ø22.22(7/8")	ø25.4(1") [ø22.22(7/8")]
	Discharge gas line			ø15.88(5/8")	ø19.05(3/4")	
Capacity connection			%	50~200		
Number of connectable indoor units				29	37	44

1. The data are measured under the following conditions(ISO-T1,H1). Cooling: Indoor temp. of 27ºCDB, 19ºCWB, and outdoor temp. of 35ºCDB. Heating: Indoor temp. of 20ºCDB, and outdoor temp. of 7ºCDB, 6ºCWB.
2. Sound pressure level indicates the value in an anechoic chamber. During operation these values are somewhat higher due to ambient conditions.
3. 'tonne(s) of CO_2 equivalent' means a quantity of greenhouse gases- expressed as the product of the weight of the greenhouse gases in metric tonnes and of their global warming potential.
4. [ ] : Pipe sizes applicable to European installations are shown in parentheses.

Dimensions

All measurements in mm.

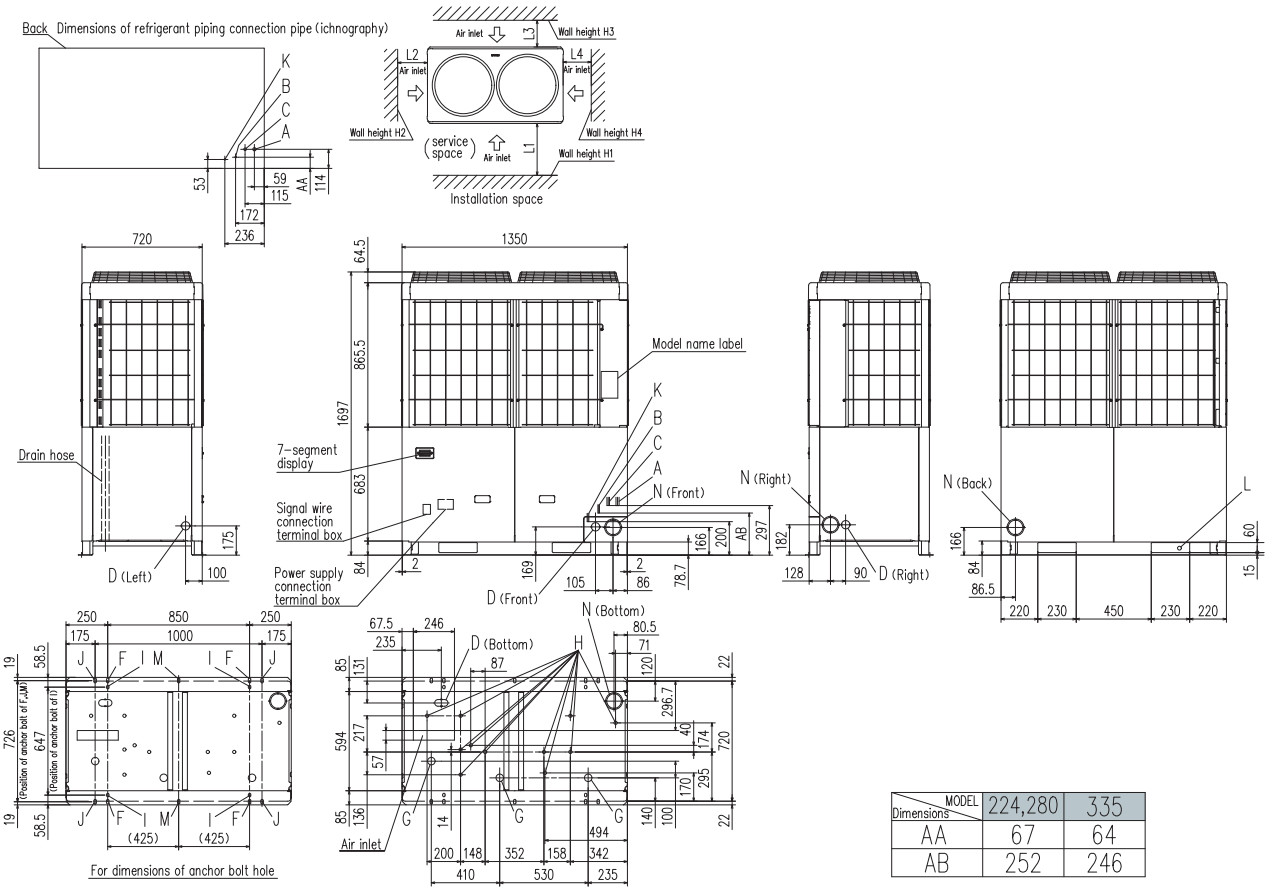

MODEL / Dimensions	224,280	335
AA	67	64
AB	252	246

Mark	Content	224	280	335
A	Refrigerant suction gas piping connection entrance	ø19.05(Brazing)	ø22.22(Brazing)	ø25.4(Brazing)
B	Refrigerant liquid piping connection entrance	ø9.52(Flare)		ø12.7(Flare)
C	Refrigerant discharge gas piping connection entrance	ø15.88(Brazing)	ø19.05(Brazing)	
D	Power supply entry hole	ø50(right · left · front),long hole 40x80(Bottom)		
F	Anchor bolt hole	M10 x 4 places		
G	Drain waste water hose hole	ø45 x 3 places		
H	Drain hole	ø20 x 11 places		
K	Refrigerant oil equalization piping connection entrance	ø9.52(Flare)		
L	Carrying in or hole for hanging	230x60		
N	Refrigerant piping exit hole	ø88(or ø100)		

Installation example		
Dimensions	1	2
L_1	500	Open
L_2	10(30)	10(30)
L_3	100	100
L_4	10(30)	Open
H_1	1500	Open
H_2	No limit	No limit
H_3	1000	No limit
H_4	No limit	Open

() :In case it is the promised installation location that the outdoor unit is used on conditions with the ambient temperature of 43ºC or more.

KXZ2 Heat recovery 3-pipe systems

14 ~ 24HP(40.0kW~67.0kW) - *for simultaneous heating and cooling*

Model No.	Nominal Cooling Capacity
FDC400KXZRE2	40.0kW
FDC450KXZRE2	45.0kW
FDC475KXZRE2	47.5kW
FDC500KXZRE2	50.0kW
FDC560KXZRE2	56.0kW
FDC615KXZRE2	61.5kW
FDC670KXZRE2	67.0kW

NEW

Blue Fin

- The new KXZ2 series has a layered design and a refined new form.
- Connect up to 71 indoor units / up to 160% capacity.(FDC400-450:200%)
- High efficiency with EER up to 3.46.
- Industry leading total piping length up to 1000m and a maximum pipe run of 160m.

Uniform footprint of all models allows continuous side-by-side installation

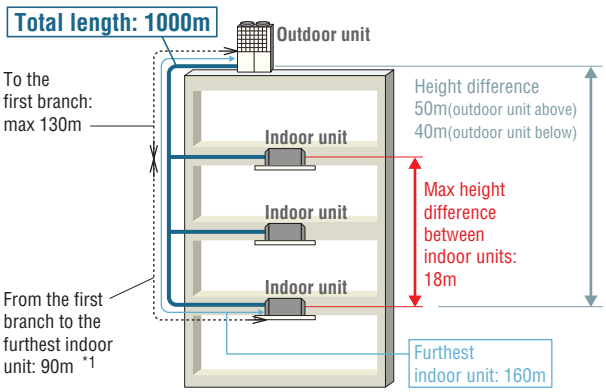

*1 The difference between the longest and the shortest indoor unit piping from the first branch must be within 40m.

Range of operation

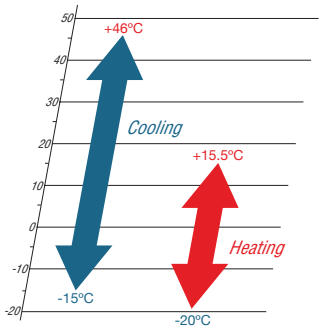

Specifications

Item			Model	FDC400KXZRE2	FDC450KXZRE2	FDC475KXZRE2	FDC500KXZRE2	FDC560KXZRE2	FDC615KXZRE2	FDC670KXZRE2
Nominal horse power				14HP	16HP	17HP	18HP	20HP	22HP	24HP
Power source				3 Phase 380-415V, 50Hz						
Starting current			A	5		8				
Max current			A	30.0	32.0	40.4	41.0	41.6	42.0	42.4
Nominal capacity	Cooling		kW	40.0	45.0	47.5	50.0	56.0	61.5	67.0
	Heating			40.0	45.0	47.5	50.0	56.0	61.5	63.0
Electrical characteristics	Power consumption	Cooling	kW	11.56	14.47	14.84	15.20	19.31	21.35	25.57
		Heating		9.76	11.39	11.67	12.69	14.93	16.14	17.45
Exterior dimensions	HxWxD		mm	2052x1350x720						
Net weight			kg	372		420				
Sound pressure level	Cooling/Heating		dB(A)	61/62	61/62	61/62	61/62	64/63	65/64	65/64
Refrigerant	Type / GWP			R410A / 2088						
	Charge		kg/TCO2Eq	11.5 / 24.012						
Refrigerant piping size	Liquid line		mm(in)	ø12.7(1/2")						
	Suction gas line			ø25.4(1") [ø28.58(1 1/8")]	ø28.58(1 1/8")					
	Discharge gas line			ø22.22(7/8")					ø25.4(1") [ø22.22(7/8")]	
Capacity connection			%	50~200		50~160				
Number of connectable indoor units				53	60	50	53	59	65	71

1. The data are measured under the following conditions(ISO-T1, H1). Cooling: Indoor temp. of 27ºCDB, 19ºCWB, and outdoor temp. of 35ºCDB. Heating: Indoor temp. of 20ºCDB, and outdoor temp. of 7ºCDB, 6ºCWB.
2. Sound pressure level indicates the value in an anechoic chamber. During operation these values are somewhat higher due to ambient conditions.
3. 'tonne(s) of CO_2 equivalent' means a quantity of greenhouse gases- expressed as the product of the weight of the greenhouse gases in metric tonnes and of their global warming potential.
4. [ ] : Pipe sizes applicable to European installations are shown in parentheses.

Dimensions

All measurements in mm.

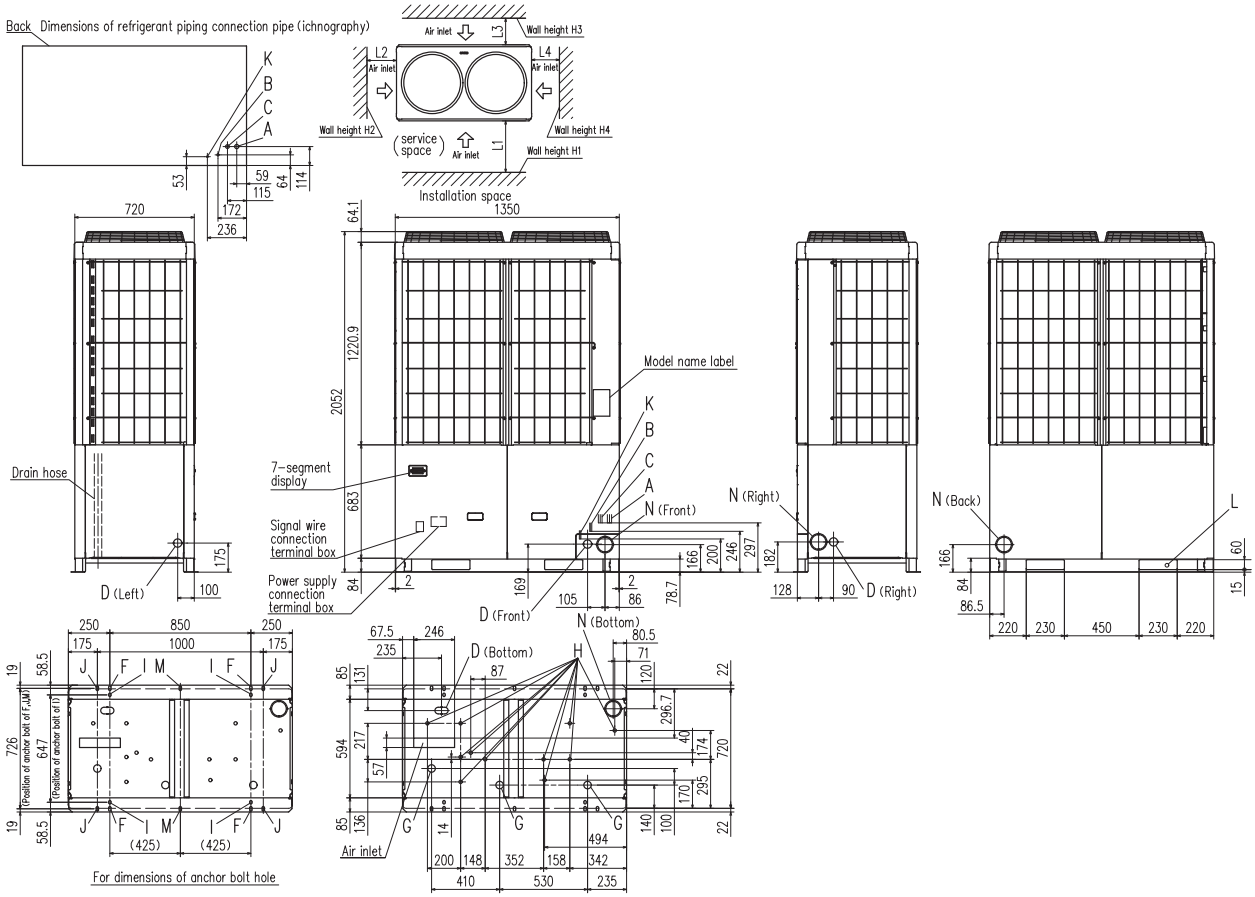

Mark	Content	400	450	475	500	560	615	670
A	Refrigerant suction gas piping connection entrance	ø25.4 (Brazing)	ø28.58(Brazing)					
B	Refrigerant liquid piping connection entrance	ø12.7(Flare)						
C	Refrigerant discharge gas piping connection entrance	ø22.22(Brazing)					ø25.4(Brazing)	
D	Power supply entry hole	ø50(right · left · front),long hole 40x80(Bottom)						
F	Anchor bolt hole	M10 x 4 places						
G	Drain waste water hose hole	ø45 x 3 places						
H	Drain hole	ø20 x 11 places						
K	Refrigerant oil equalization piping connection pipe	ø9.52(Flare)						
L	Carrying in or hole for hanging	230x60						
N	Refrigerant piping exit hole	ø88(or ø100)						

Installation example		
Dimensions	1	2
L_1	500	Open
L_2	10(30)	10(30)
L_3	100	100
L_4	10(30)	Open
H_1	1500	Open
H_2	No limit	No limit
H_3	1000	No limit
H_4	No limit	Open

() :In case it is the promised installation location that the outdoor unit is used on conditions with the ambient temperature of 43ºC or more.

KXZ2 Heat recovery 3-pipe systems

26 ~ 40HP (73.5kW~112.0kW)

- for simultaneous heating and cooling

Model No.	Cooling Capacity
FDC735KXZRE2	73.5kW
FDC800KXZRE2	80.0kW
FDC850KXZRE2	85.0kW
FDC900KXZRE2	90.0kW
FDC950KXZRE2	95.0kW
FDC1000KXZRE2	100.0kW
FDC1060KXZRE2	106.0kW
FDC1120KXZRE2	112.0kW

- The new KXZ2 series has a layered design and a refined new form.
- Connect up to 80 indoor units / up to 160% capacity.(FDC1000-1120:130%)
- High efficiency with EER up to 3.47.
- Industry leading total piping length up to 1000m and a maximum pipe run of 160m.
- Wide range of operation.

NEW

FDC735

Specifications

Item			Model	FDC735KXZRE2
Combination (FDC)				335KXZRE2
				400KXZRE2
Nominal horse power				26HP
Power source				3 Phase 380-415V, 50Hz
Starting current			A	10
Max current			A	51.2
Nominal capacity	Cooling		kW	73.5
	Heating			73.5
Electrical characteristics	Power consumption	Cooling	kW	21.21
		Heating		18.20
Exterior dimensions	HxWxD		mm	2052x2700x720
Net weight			kg	677
Refrigerant charge	R410A		kg	11.5x2
Refrigerant piping size	Liquid line		mm(in)	ø15.88(5/8")
	Suction gas line			ø31.75(1 1/4") [ø34.92(1 3/8")]
	Discharge gas line			ø25.4(1") [ø28.58(1 1/8")]
Capacity connection			%	50~160
Number of connectable indoor units				78

FDC800~1120

Exterior dimension : Please refer to page 57, 59.

Item			Model	FDC800KXZRE2	FDC850KXZRE2	FDC900KXZRE2	FDC950KXZRE2	FDC1000KXZRE2	FDC1060KXZRE2	FDC1120KXZRE2
Combination (FDC)				400KXZRE2	400KXZRE2	450KXZRE2	475KXZRE2	500KXZRE2	500KXZRE2	560KXZRE2
				400KXZRE2	450KXZRE2	450KXZRE2	475KXZRE2	500KXZRE2	560KXZRE2	560KXZRE2
Nominal horse power				28HP	30HP	32HP	34HP	36HP	38HP	40HP
Power source				3 Phase 380-415V, 50Hz						
Starting current			A	10			16			
Max current			A	60.0	62.0	64.0	80.8	82.0	82.6	83.2
Nominal capacity	Cooling		kW	80.0	85.0	90.0	95.0	100.0	106.0	112.0
	Heating			80.0	85.0	90.0	95.0	100.0	106.0	112.0
Electrical characteristics	Power consumption	Cooling	kW	23.12	26.03	28.94	29.68	30.40	34.51	38.62
		Heating		19.52	21.15	22.78	23.34	25.38	27.62	29.86
Exterior dimensions	HxWxD		mm	2052x2700x720						
Net weight			kg	744			840			
Refrigerant charge	R410A		kg	11.5x2						
Refrigerant piping size	Liquid line		mm(in)	ø15.88(5/8")					ø19.05(3/4")	
	Suction gas line			ø31.75(1 1/4") [ø34.92(1 3/8")]				ø38.1(1 1/2") [ø34.92(1 3/8")]		
	Discharge gas line			ø28.58(1 1/8")					ø31.75(1 1/4") [ø28.58(1 1/8")]	
Capacity connection			%	50~160				50~130		
Number of connectable indoor units				80						

1. The data are measured under the following conditions(ISO-T1,H1). Cooling: Indoor temp. of 27ºCDB, 19ºCWB, and outdoor temp. of 35ºCDB. Heating: Indoor temp. of 20ºCDB, and outdoor temp. of 7ºCDB, 6ºCWB.
2. Sound pressure level indicates the value in an anechoic chamber. During operation these values are somewhat higher due to ambient conditions.
3. [ ] : Pipe sizes applicable to European installations are shown in parentheses.

KXZ2 Heat recovery 3-pipe systems
42 ~ 60HP (120.0kW~168.0kW)

- for simultaneous heating and cooling

Blue Fin

Model No.	Cooling Capacity
FDC1200KXZRE2	120.0kW
FDC1250KXZRE2	125.0kW
FDC1300KXZRE2	130.0kW
FDC1350KXZRE2	135.0kW
FDC1425KXZRE2	142.5kW
FDC1450KXZRE2	145.0kW
FDC1500KXZRE2	150.0kW
FDC1560KXZRE2	156.0kW
FDC1620KXZRE2	162.0kW
FDC1680KXZRE2	168.0kW

NEW

FDC1200~1680

- The new KXZ2 series has a layered design and a refined new form.
- Connect up to 80 indoor units / up to 130% capacity.
- High efficiency with EER up to 3.46.
- Industry leading total piping length up to 1000m and a maximum pipe run of 160m.
- Wide range of operation.

Specifications

Exterior dimension : Please refer to page 59.

Item			Model	FDC1200KXZRE2	FDC1250KXZRE2	FDC1300KXZRE2	FDC1350KXZRE2	FDC1425KXZRE2
Combination (FDC)				400KXZRE2	400KXZRE2	400KXZRE2	450KXZRE2	475KXZRE2
				400KXZRE2	400KXZRE2	450KXZRE2	450KXZRE2	475KXZRE2
				400KXZRE2	450KXZRE2	450KXZRE2	450KXZRE2	475KXZRE2
Nominal horse power				42HP	44HP	46HP	48HP	50HP
Power source				3 Phase 380-415V, 50Hz				
Starting current			A	15				24
Max current			A	90	92	94	96	121.2
Nominal capacity	Cooling		kW	120.0	125.0	130.0	135.0	142.5
	Heating			120.0	125.0	130.0	135.0	142.5
Electrical characteristics	Power consumption	Cooling	kW	34.68	37.59	40.50	43.41	44.52
		Heating		29.28	30.91	32.54	34.17	35.01
Exterior dimensions	HxWxD		mm	2052x4050x720				
Net weight			kg	1116				1260
Refrigerant charge	R410A		kg	11.5x3				
Refrigerant piping size	Liquid line		mm(in)	ø19.05(3/4")				
	Suction gas line			ø38.1(1 1/2") [ø34.92(1 3/8")]				
	Discharge gas line			ø31.75(1 1/4") [ø28.58(1 1/8")]				
Capacity connection			%	50~130				
Number of connectable indoor units				80				

Item			Model	FDC1450KXZRE2	FDC1500KXZRE2	FDC1560KXZRE2	FDC1620KXZRE2	FDC1680KXZRE2
Combination (FDC)				475KXZRE2	500KXZRE2	500KXZRE2	500KXZRE2	560KXZRE2
				475KXZRE2	500KXZRE2	500KXZRE2	560KXZRE2	560KXZRE2
				500KXZRE2	500KXZRE2	560KXZRE2	560KXZRE2	560KXZRE2
Nominal horse power				52HP	54HP	56HP	58HP	60HP
Power source				3 Phase 380-415V, 50Hz				
Starting current			A	24				
Max current			A	121.8	123.0	123.6	124.2	124.8
Nominal capacity	Cooling		kW	145.0	150.0	156.0	162.0	168.0
	Heating			145.0	150.0	156.0	162.0	168.0
Electrical characteristics	Power consumption	Cooling	kW	44.88	45.60	49.71	53.82	57.93
		Heating		36.03	38.07	40.31	42.55	44.79
Exterior dimensions	HxWxD		mm	2052x4050x720				
Net weight			kg	1260				
Refrigerant charge	R410A		kg	11.5x3				
Refrigerant piping size	Liquid line		mm(in)	ø19.05(3/4")				
	Suction gas line			ø38.1(1 1/2") [ø34.92(1 3/8")]				
	Discharge gas line			ø31.75(1 1/4") [ø28.58(1 1/8")]				
Capacity connection			%	50~130				
Number of connectable indoor units				80				

1. The data are measured under the following conditions(ISO-T1,H1). Cooling: Indoor temp. of 27ºCDB, 19ºCWB, and outdoor temp. of 35ºCDB. Heating: Indoor temp. of 20ºCDB, and outdoor temp. of 7ºCDB, 6ºCWB.
2. Sound pressure level indicates the value in an anechoic chamber. During operation these values are somewhat higher due to ambient conditions.
3. [ ] : Pipe sizes applicable to European installations are shown in parentheses.

KXZ2 Heat Recovery Hi-COP 3-pipe systems

16 ~ 24HP (45.0kW~67.0kW)

- for simultaneous heating and cooling

Blue Fin

NEW

Model No.	Nominal Cooling Capacity
FDC450KXZRXE2 (FDC224+FDC224)	45.0kW
FDC500KXZRXE2 (FDC224+FDC280)	50.0kW
FDC560KXZRXE2 (FDC280+FDC280)	56.0kW
FDC615KXZRXE2 (FDC280+FDC335)	61.5kW
FDC670KXZRXE2 (FDC335+FDC335)	67.0kW

- The new KXZ2 series has a layered design and a refined new form.
- This series can connect indoor unit capacity up to 160%.(FDC450:200%)
- High efficiency with EER up to 3.91.
- Industry leading total piping length up to1000m and a maximum pipe run of 160m.

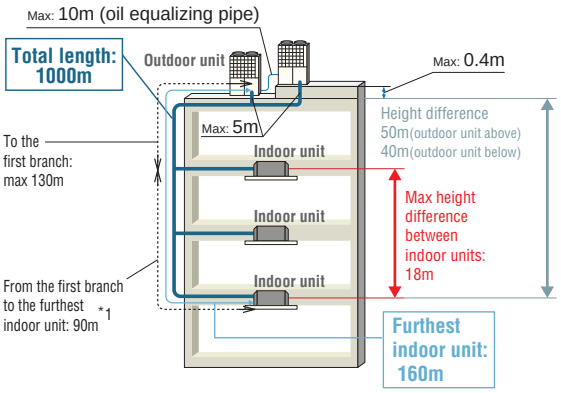

*1 The difference between the longest and the shortest indoor unit piping from the first branch must be within 40m.

Range of operation

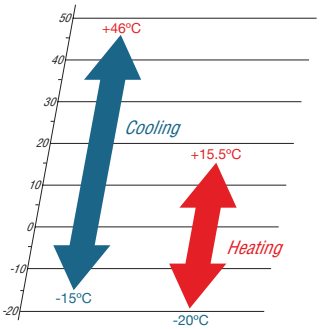

Specifications

Exterior dimension : Please refer to page 57.

Item			Model	FDC450KXZRXE2	FDC500KXZRXE2	FDC560KXZRXE2	FDC615KXZRXE2	FDC670KXZRXE2
Combination (FDC)				224KXZRE2	224KXZRE2	280KXZRE2	280KXZRE2	335KXZRE2
				224KXZRE2	280KXZRE2	280KXZRE2	335KXZRE2	335KXZRE2
Nominal horse power				16HP	18HP	20HP	22HP	24HP
Power source				3 Phase 380-415V, 50Hz				
Starting current			A	10				
Max current			A	32.0	36.0	40.0	41.2	42.4
Nominal capacity	Cooling		kW	45.0	50.0	56.0	61.5	67.0
	Heating			45.0	50.0	56.0	61.5	67.0
Electrical characteristics	Power consumption	Cooling	kW	11.52	13.15	14.78	17.04	19.30
		Heating		10.54	12.13	13.72	15.30	16.88
Exterior dimensions	HxWxD		mm	1697x2700x720				
Net weight			kg	610				
Refrigerant charge	R410A		kg	11.5x2				
Refrigerant piping size	Liquid line		mm(in)	ø12.7(1/2")				
	Suction gas line			ø28.58(1 1/8")				
	Discharge gas line			ø22.22(7/8")			ø25.4(1") [ø22.22(7/8")]	
Capacity connection			%	80~200	80~160			
Number of connectable indoor units				60	53	59	65	71

1. The data are measured under the following conditions(ISO-T1,H1). Cooling: Indoor temp. of 27ºCDB, 19ºCWB, and outdoor temp. of 35ºCDB. Heating: Indoor temp. of 20ºCDB, and outdoor temp. of 7ºCDB, 6ºCWB.
2. Sound pressure level indicates the value in an anechoic chamber. During operation these values are somewhat higher due to ambient conditions.
3. [ ] : Pipe sizes applicable to European installations are shown in parentheses.

KXZ2 Heat Recovery Hi-COP 3-pipe systems

26 ~ 36HP (73.5kW~100.0kW)

- for simultaneous heating and cooling

NEW

Blue Fin

Model No.		Nominal Cooling Capacity
FDC735KXZRXE2	(FDC224+FDC224+FDC280)	73.5kW
FDC800KXZRXE2	(FDC224+FDC280+FDC280)	80.0kW
FDC850KXZRXE2	(FDC280+FDC280+FDC280)	85.0kW
FDC900KXZRXE2	(FDC280+FDC280+FDC335)	90.0kW
FDC950KXZRXE2	(FDC280+FDC335+FDC335)	95.0kW
FDC1000KXZRXE2	(FDC335+FDC335+FDC335)	100.0kW

- The new KXZ2 series has a layered design and a refined new form.
- This series can connect indoor unit capacity up to 160%. (FDC1000:130%)
- High efficiency with EER up to 3.89.
- Industry leading total piping length up to 1000m and a maximum pipe run of 160m.

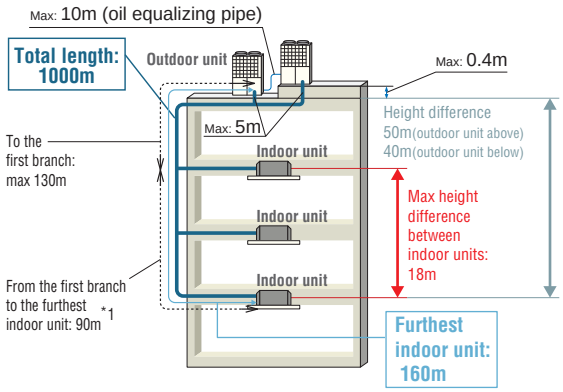

*1 The difference between the longest and the shortest indoor unit piping from the first branch must be within 40m.

Range of operation

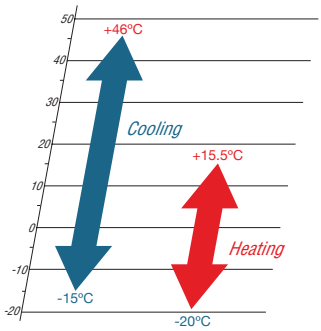

Specifications

Exterior dimension : Please refer to page 57.

Item			Model	FDC735KXZRXE2	FDC800KXZRXE2	FDC850KXZRXE2	FDC900KXZRXE2	FDC950KXZRXE2	FDC1000KXZRXE2
Combination (FDC)				224KXZRE2	224KXZRE2	280KXZRE2	280KXZRE2	280KXZRE2	335KXZRE2
				224KXZRE2	280KXZRE2	280KXZRE2	280KXZRE2	335KXZRE2	335KXZRE2
				280KXZRE2	280KXZRE2	280KXZRE2	335KXZRE2	335KXZRE2	335KXZRE2
Nominal horse power				26HP	28HP	30HP	32HP	34HP	36HP
Power source				3 Phase 380-415V, 50Hz					
Starting current			A	15					
Max current			A	52.0	56.0	60.0	61.2	62.4	63.6
Nominal capacity	Cooling		kW	73.5	80.0	85.0	90.0	95.0	100.0
	Heating			73.5	80.0	85.0	90.0	95.0	100.0
Electrical characteristics	Power consumption	Cooling	kW	18.91	20.54	22.17	24.43	26.69	28.95
		Heating		17.40	18.99	20.58	22.16	23.74	25.32
Exterior dimensions	HxWxD		mm	1690x4050x720					
Net weight			kg	915					
Refrigerant charge	R410A		kg	11.5x3					
Refrigerant piping size	Liquid line		mm(in)	ø15.88(5/8")					
	Suction gas line			ø31.75(1 1/4") [ø34.92(1 3/8")]					ø38.1(1 1/2") [ø34.92(1 3/8")]
	Discharge gas line			ø25.4(1") [ø28.58(1 1/8")]	ø28.58(1 1/8")				
Capacity connection			%	80~160					80~130
Number of connectable indoor units				78	80				

1. The data are measured under the following conditions(ISO-T1,H1). Cooling: Indoor temp. of 27ºCDB, 19ºCWB, and outdoor temp. of 35ºCDB. Heating: Indoor temp. of 20ºCDB, and outdoor temp. of 7ºCDB, 6ºCWB.
2. Sound pressure level indicates the value in an anechoic chamber. During operation these values are somewhat higher due to ambient conditions.
3. [ ] : Pipe sizes applicable to European installations are shown in parentheses.

PFD refrigerant flow branch control

Relay kit
(Relay kit comes attached to the branch control)

Branch control	Total downstream indoor unit capacity
PFD1124-E	less than 11.2kW
PFD1804-E	less than 18.0kW
PFD2804-E	28.0kW or less
PFD1124X4-E	less than 37.1kW(less than 11.2kWx4 branches)

4-Way PFD box

Design flexibility

A total of 37.1 kW group of indoor units can be connected to a PFD box single branch.
All connected units will operate in the same mode only (cooling or heating).

The recent 4-way PFD control PFD1124X4-E can connect to up to four indoor units with individual control – allowing for simultaneous cooling or heating.

Branch control	Total downstream capacity	Connectable indoor units
PFD1124-E	less than 112	1-5
PFD1804-E	112 or more but less than 180	1-8
PFD2804-E	180 or more but less than 280	1-10
PFD1124X4-E	less than 371(less than 112 per branch)	Up to 16

*Refer to Data Book for details

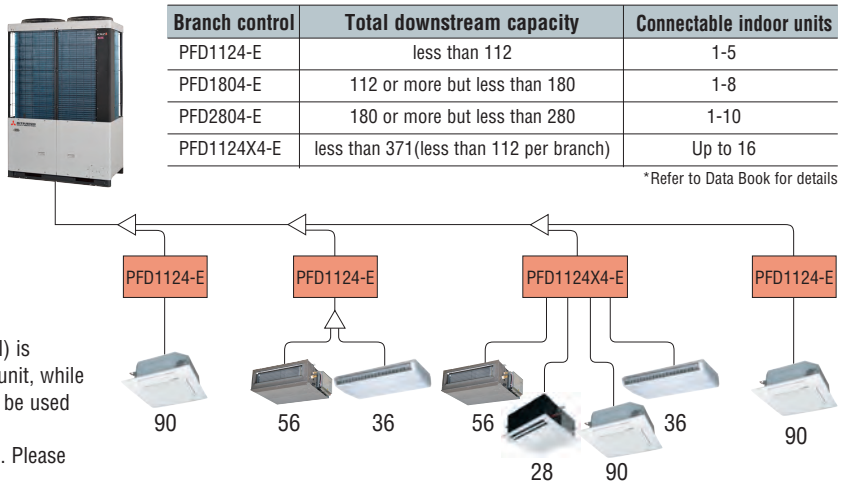

- The remote control setting (as individual indoor unit on-off, temperature setting other than cooling/heating mode control) is possible with one remote control connected to each indoor unit, while at the same time, Center Control (SC-SL1N/2NA/4-AE2) can be used together with the individual remote control.
- It is necessary to set the central control to use this function. Please refer to the Installation Manual for details.
- In case of mode changeover from cooling to heating and from heating to cooling, by the use of only the indoor units and PFD box combination, the mode changeover noise is reduced. All this made possible without turning off the compressor and at the same time without the reduction of capacity.
  The risk of refrigerant leakage is reduced by changing piping connection at the PFD box to brazing method.
- The use of optional PFD box extension cable that has a connector at ends, makes it possible to further separate the indoor unit and PFD box. This will enable the PFD box to be located away from the indoor unit and help reduce the influence of sound caused by PFD box and refrigerant flow.

Easy installation
PFD control box design allows to directly connect the liquid pipe from indoor unit to outdoor unit by bypassing the PFD box. As a result, the piping connections per indoor unit are reduced by a third, thus reducing installation time and cost.

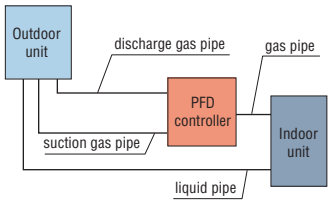

extension cable 15m

PFD4-15WR-E (option)

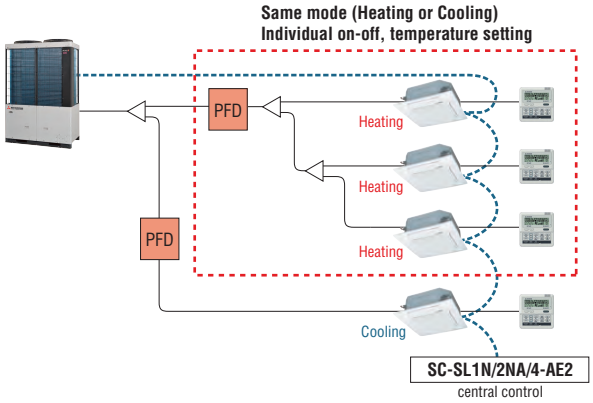

The PFD is connected to the indoor unit by 3 core signal wire via a relay kit (supplied) to be located within 2m of each other. The indoor unit however can be up to 40m away. Power to the PFD can be connected from the indoor unit or other supply.

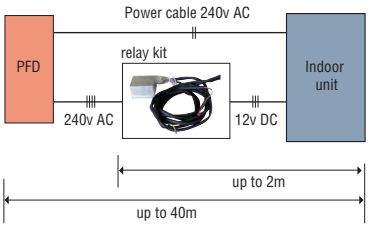

Dimensions

All measurements in mm.

PFD1124-E

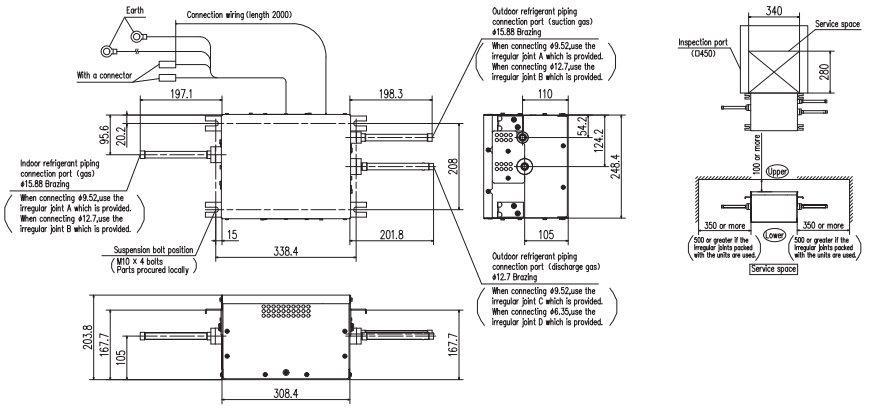

PFD1804-E

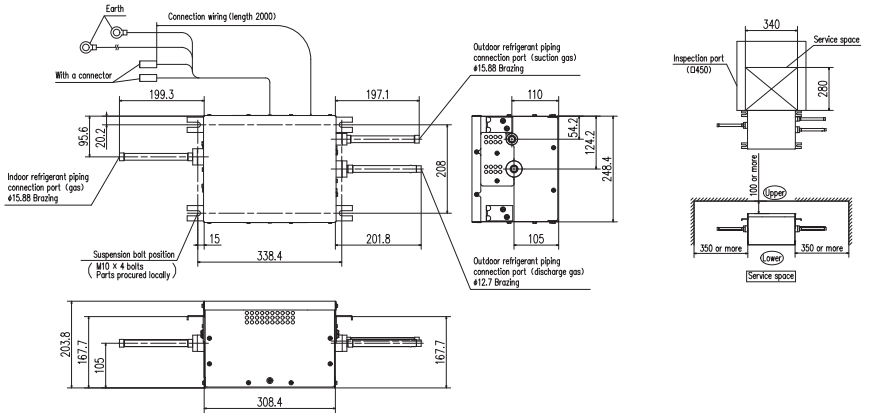

PFD2804-E

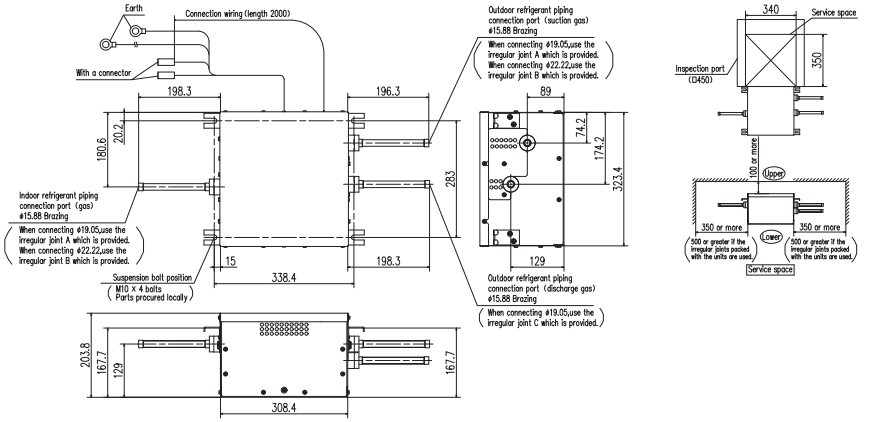

PFD1124X4-E

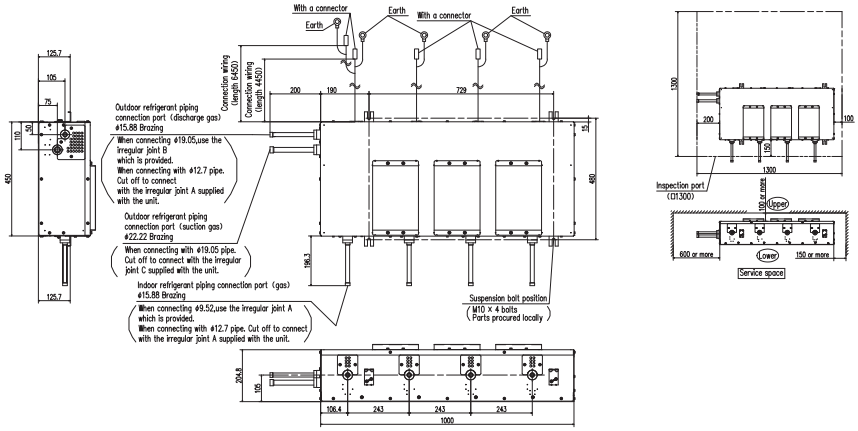

Water cooled series
8~36HP (22.4~100.0kW)

Model No.	Nominal Cooling Capacity
FDC224KXZWE1	22.4kW
FDC280KXZWE1	28.0kW
FDC335KXZWE1	33.5kW
FDC450KXZWE1(FDC224×2)	45.0kW
FDC500KXZWE1(FDC224+FDC280)	50.0kW
FDC560KXZWE1(FDC280×2)	56.0kW
FDC615KXZWE1(FDC280+FDC335)	61.5kW
FDC670KXZWE1(FDC335×2)	67.0kW

Model No.	Nominal Cooling Capacity
FDC730KXZWE1(FDC224×2+FDC280)	73.0kW
FDC775KXZWE1(FDC224+FDC280×2)	77.5kW
FDC850KXZWE1(FDC280×3)	85.0kW
FDC900KXZWE1(FDC280×2+FDC335)	90.0kW
FDC950KXZWE1(FDC280+FDC335×2)	95.0kW
FDC1000KXZWE1(FDC335×3)	100kW

Features

1. High efficiency (EER/COP)
- Energy saving ➡ Reduction of operation cost

2. Compact design
- Easy transportation and installation
- Carriable by elevator

3. BMS (Building Management System)
- Can use the same BMS as air cooled KX
- Available to large-scale and fine control

4. Serviceability & Maintenance
- Service and maintenance of main parts can be done from the front side only
- Useful service tools (Mente-PC, SL-Checker etc.)

Applicable to

1. High-rise Building
- 50m <FDC> , -100m <FDCH>
- 100m or higher in height <FDCW>

2. Glass-exterior facade Building
- Possible to hide KXZW units and to keep fine sight

8, 10, 12HP

16, 18, 20, 22, 24HP

26, 28, 30, 32, 34, 36HP

Specifications

Item		Model	FDC224KXZWE1	FDC280KXZWE1	FDC335KXZWE1	FDC450KXZWE1	FDC500KXZWE1	FDC560KXZWE1	FDC615KXZWE1	FDC670KXZWE1
Combination (FDC)			-	-	-	224KXZWE1	224KXZWE1	280KXZWE1	280KXZWE1	335KXZWE1
			-	-	-	224KXZWE1	280KXZWE1	280KXZWE1	335KXZWE1	335KXZWE1
Nominal horse power			8HP	10HP	12HP	16HP	18HP	20HP	22HP	24HP
Power source			3 Phase 380-415V, 50Hz							
Nominal capacity	Cooling	kW	22.4	28.0	33.5	45.0	50.0	56.0	61.5	67.0
	Heating		25.0	31.5	37.5	50.0	56.0	63.0	69.0	75.0
Power consumption	Cooling	kW	4.23	5.75	8.13	8.49	9.83	11.5	13.7	16.3
	Heating		4.24	5.10	6.30	8.47	9.27	10.2	11.4	12.6
EER	Cooling		5.3	4.9	4.1	5.3	5.1	4.9	4.5	4.1
COP	Heating		5.9	6.2	6.0	5.9	6.0	6.2	6.1	6.0
Exterior dimensions	HxWxD	mm	1100x780x550			(1100x780x550)x2				
Sound pressure level		dB(A)	48	50	52	51	52	53	54	55
Net weight		kg	185			185x2				

Item		Model	FDC730KXZWE1	FDC775KXZWE1	FDC850KXZWE1	FDC900KXZWE1	FDC950KXZWE1	FDC1000KXZWE1
Combination (FDC)			224KXZWE1	224KXZWE1	280KXZWE1	280KXZWE1	280KXZWE1	335KXZWE1
			224KXZWE1	280KXZWE1	280KXZWE1	280KXZWE1	335KXZWE1	335KXZWE1
			280KXZWE1	280KXZWE1	280KXZWE1	335KXZWE1	335KXZWE1	335KXZWE1
Nominal horse power			26HP	28HP	30HP	32HP	34HP	36HP
Power source			3 Phase 380-415V, 50Hz					
Nominal capacity	Cooling	kW	73.0	77.5	85.0	90.0	95.0	100
	Heating		82.5	90.0	95.0	100	106	112
Power consumption	Cooling	kW	14.2	15.5	17.5	19.5	21.7	24.3
	Heating		13.8	14.8	15.4	16.4	17.6	18.8
EER	Cooling		5.1	5.0	4.9	4.6	4.4	4.1
COP	Heating		6.0	6.1	6.2	6.1	6.0	6.0
Exterior dimensions	HxWxD	mm	(1100x780x550)x3					
Sound pressure level		dB(A)	54	54	55	56	56	57
Net weight		kg	185x3					

The data are based on the rating condition:
Cooling: Indoor temp. of 27 °C DB,19 °C WB, and heat source unit inlet water temp. of 30 °C, water flow rate 96 L/min
Heating: Indoor temp. of 20 °C DB,15 °C WB, and heat source unit inlet water temp. of 20 °C, water flow rate 96 L/min

Heat source units on every floor
- New building projects -

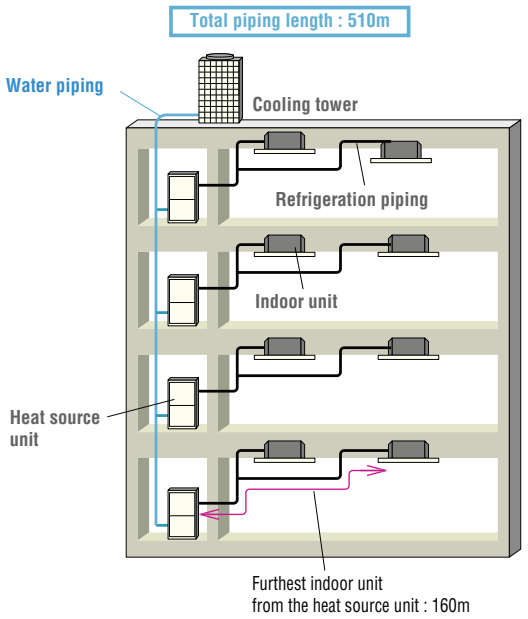

Heat source units in the machine room
- Renovation projects -

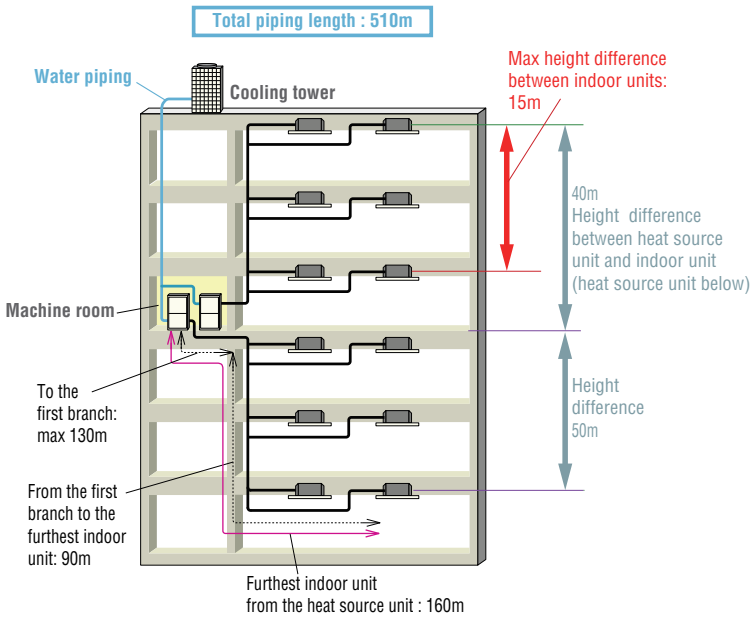

Dimensions

All measurements in mm.

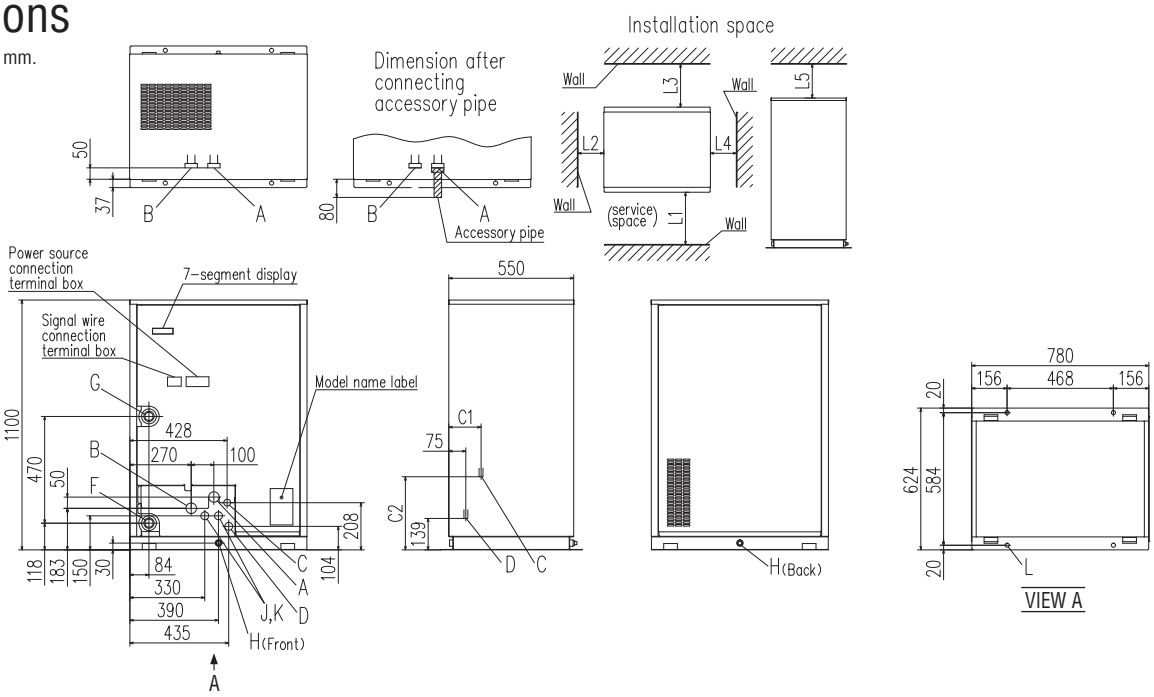

Mark	Content	
A	High/low gas line	Refer to piping size
B	–	Not to use.
C	Liquid line	Refer to piping size
D	Oil equalization line	
F	Water inlet	R1 1/4
G	Water outlet	R1 1/4
H	Drain outlet	Rp 1/2,2places
J	Power source intake	ø35
K	Signal wiring intake	ø35
L	Anchor bolt hole	ø18,4places

Dimension	FDC-KXZWE1	
	224,280	335
C1	142	139
C2	322	316

Dimension \ Installation example	1
L1	600 or more
L2	20 or more
L3	500 or more
L4	20 or more
L5	300 or more

Piping size

	FDC224KXZWE1	FDC280KXZWE1	FDC335KXZWE1	Connection method
High/low gas line	ø19.05	ø22.22	ø25.4	Flange
Liquid line	ø9.52	ø9.52	ø12.7	Flare
Oil equalization line	ø9.52	ø9.52	ø9.52	

Refrigerant piping

Installation of Interconnecting Pipework

KXZ equipment is manufactured to meet the highest standards of quality and reliability. It is imperative that the method of installation and the materials used are also to the high standards, to ensure trouble free operation and long term reliability.

The interconnecting pipework must be installed by a competent and trained engineer. Refrigeration quality copper tube must be used, soft copper coils or half-hard straight lengths. The refrigeration quality tube must be soft drawn seamless high grade copper pipe. The copper tube must be selected taking into account the higher operating pressures of R32・R410A refrigerant, and that high pressures will occur throughout the system because of the reverse cycle operation. All pipework material used should comply with EN12735 European standard.

The supplied branch pipe kits, must be used to make connections to indoor units, and the supplied manifold kits must be used to make connections between outdoor units (where applicable); it is not permitted to use standard fittings such as elbows, tees etc. The branch pipes shall be installed in accordance with the manufacturer's instructions, allowing unrestricted flow of refrigerant, and in accordance with European standard EN378.

All brazed joints shall be made with dry nitrogen purge to ensure the prevention of oxidisation of the internal surface of the copper pipes.

The ingress of moisture, dirt and any other contaminants to the interior of the copper pipes, and air conditioning units, must be prevented during the installation procedure.

After the installation of pipework, prior to the connection of the outdoor units, and sealing of insulation joints, the pipework must be pressure tested for leakage, using dry nitrogen.

Additional Refrigerant

Only R32・R410A refrigerant shall be used, it must be charged by weight only, using electronic scales. The amount of additional refrigerant must be accurately calculated from the manufacturer's data, based on the length and diameter of each section of the liquid refrigerant pipework of the system.

The products contains fluorinated greenhouse gases covered by Kyoto protocol.

Standard (Outdoor unit side branching pipe – Indoor unit side first branching pipe)

If the longest distance (measured between the outdoor unit and the farthest indoor unit) is 90m or longer (actual length), please change the main pipe size according to the table below.

Outdoor unit	Main pipe size (normal)		Pipe size for an actual length of 90m or longer	
	Gas pipe	Liquid pipe	Gas pipe	Liquid pipe
280	ø22.22 × t 1.0	ø9.52 × t 0.8	ø25.4 (ø22.22) × t 1.0	ø12.7 × t 0.8
335	ø25.4 (ø22.22) × t 1.0	ø12.7 × t 0.8		
400	ø25.4 (ø28.58) × t 1.0		ø28.58 × t 1.0	
450	ø28.58 × t 1.0		ø31.8 × t 1.1 (ø28.58 × t 1.0)	ø15.88 × t 1.0
475				
500				
560				
615				
670				
735	ø31.8 × t 1.1 (ø34.92 × t 1.2)	ø15.88 × t 1.0	ø38.1 × t 1.35 (ø34.92 × t 1.2)	ø19.05 × t 1.0
800				
850				
900				
950				
1000	ø38.1 × t 1.35 (ø34.92 × t 1.2)	ø19.05 × t 1.0		ø22.22 × t 1.0
1060				
1120				
1200				
1250				
1300				
1350				
1425				
1450				
1500				
1560				
1620				
1680				

Please use C1220T-1/2H for ø19.05 or larger pipes.
Pipe sizes applicable to European installations are shown in parentheses.

mm	inch
ø9.52	3/8"
ø12.7	1/2"
ø15.88	5/8"
ø19.05	3/4"
ø22.22	7/8"
ø25.4	1"

mm	inch
ø28.58	$1^{1/8}$"
ø31.8	$1^{1/4}$"
ø34.92	$1^{3/8}$"
ø38.1	$1^{1/2}$"
ø44.5	$1^{3/4}$"
ø50.8	2"

Branch pipes

DIS-22-1G/DIS-180-1G

Header pipe

HEAD6-180-1G

DIS-371-1G/DIS-540-3

Combination outdoor unit manifold

DOS-2A-3
DOS-3A-3

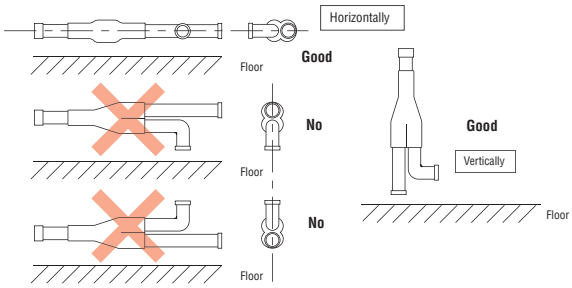

Single outdoor unit piping examples:

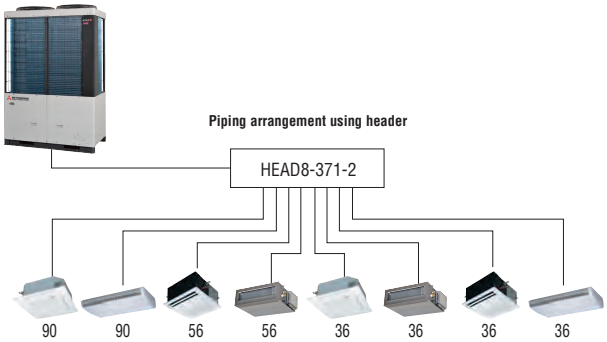

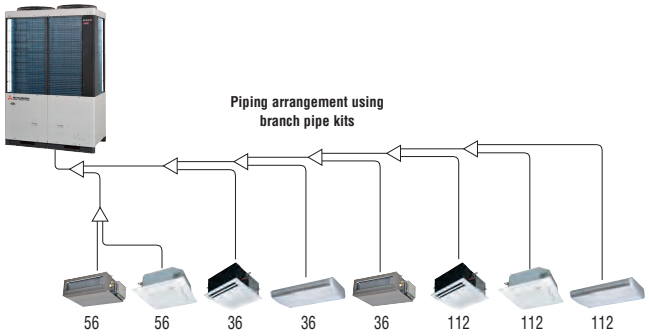

Combination outdoor unit piping examples:

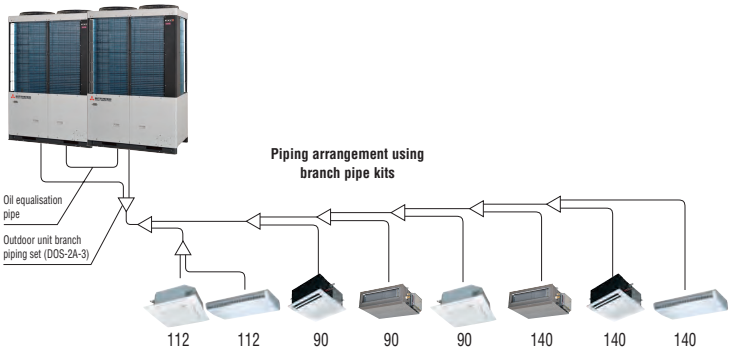

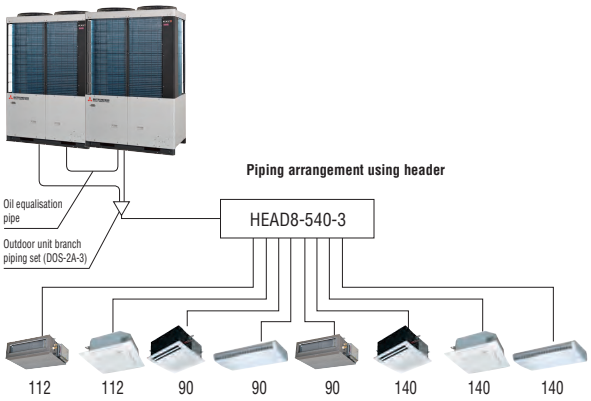

Outdoor unit's branch piping set

Outdoor unit	Branch piping set
For two units	DOS-2A-3
For three units	DOS-3A-3

Indoor unit's first branch piping set

Total capacity of indoor units	Branch piping set	Header set	
		Model	Branches
~179	DIS-22-1G	HEAD4-22-1G	Max 4 branches
180~370	DIS-180-1G	HEAD6-180-1G	Max 6 branches
371~539	DIS-371-1G	HEAD8-371-2	Max 8 branches
540~	DIS-540-3	HEAD8-540-3	Max 8 branches

Heat recovery systems **(Outdoor unit side branching pipe – Indoor unit side first branching pipe)**

If the longest distance (measured between the outdoor unit and the farthest indoor unit) is 90m or longer (actual length), please change the main pipe size according to the table below.

※Even if the longest distance exceeds 90m (actual length), you do not need to change the size of discharge gas pipes.

Outdoor unit	Main pipe size (normal)			Pipe size for an actual length of 90m or longer		
	Suction gas pipe	Discharge gas pipe	Liquid pipe	Suction gas pipe	Discharge gas pipe	Liquid pipe
224	ø19.05×t1.0	ø15.88×t1.0	ø9.52×t0.8	ø22.22×t1.0	ø15.88×t1.0	ø12.7×t0.8
280	ø22.22×t1.0	ø19.05×t1.0		ø25.4 (ø22.22)×t1.0	ø19.05×t1.0	
335	ø25.4 (ø22.22)×t1.0		ø12.7×t0.8			
400	ø25.4 (ø28.58)×t1.0	ø22.22×t1.0		ø28.58×t1.0	ø22.22×t1.0	
450	ø28.58×t1.0			ø31.8×t1.1 (ø28.58×t1.0)		ø15.88×t1.0
475						
500						
560						
615		ø25.4 (ø22.22)×t1.0			ø25.4 (ø22.22)×t1.0	
670						
735	ø31.8×t1.1 (ø34.92×t1.2)	ø28.58 (ø25.4)×t1.0	ø15.88×t1.0	ø38.1×t1.35 (ø34.92×t1.2)	ø28.58×t1.0	ø19.05×t1.0
800		ø28.58×t1.0				
850						
900						
950						
1000	ø38.1×t1.35 (ø34.92×t1.2)	ø31.8×t1.1 (ø28.58×t1.0)	ø19.05×t1.0		ø31.8×t1.1 (ø28.58×t1.0)	ø22.22×t1.0
1060						
1120						
1200						
1350						
1425						
1450						
1500						
1560						
1620						
1680						

Please use C1220T-1/2H for ø19.05 or larger pipes. Pipe sizes applicable to European installations.

mm	inch	mm	inch
ø9.52	3/8"	ø28.58	1 1/8"
ø12.7	1/2"	ø31.8	1 1/4"
ø15.88	5/8"	ø34.92	1 3/8"
ø19.05	3/4"	ø38.1	1 1/2"
ø22.22	7/8"	ø44.5	1 3/4"
ø25.4	1"	ø50.8	2"

Branch pipes

DIS-22-1-RG/DIS-180-1-RG

Combination outdoor unit manifold

DOS-2A-3-R

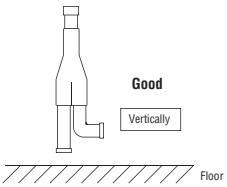

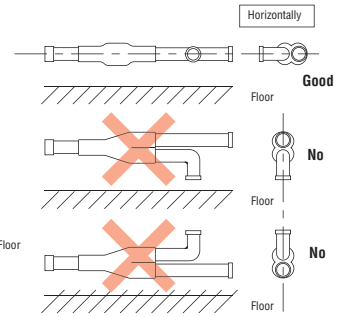

Single outdoor unit piping examples:

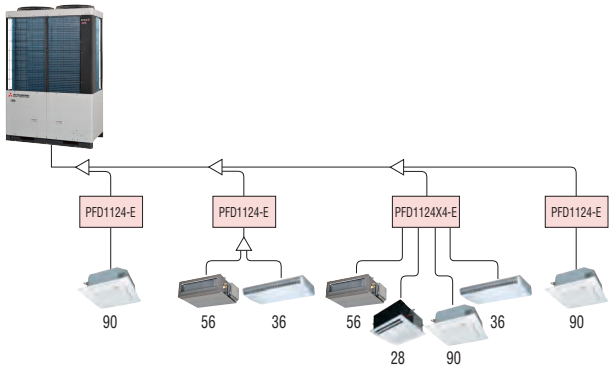

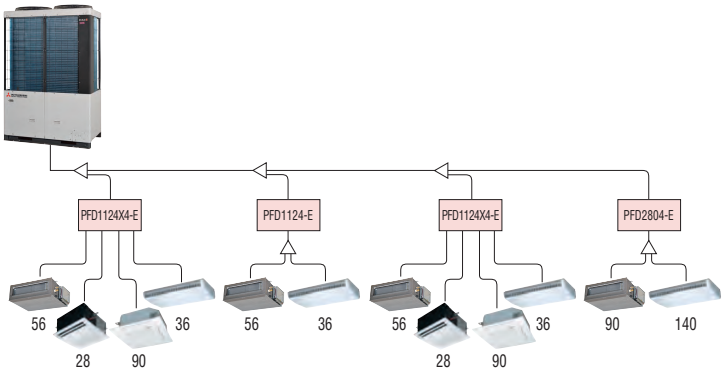

Combination outdoor unit piping examples:

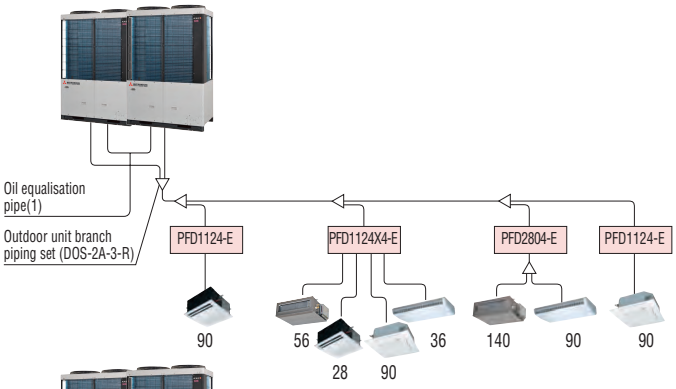

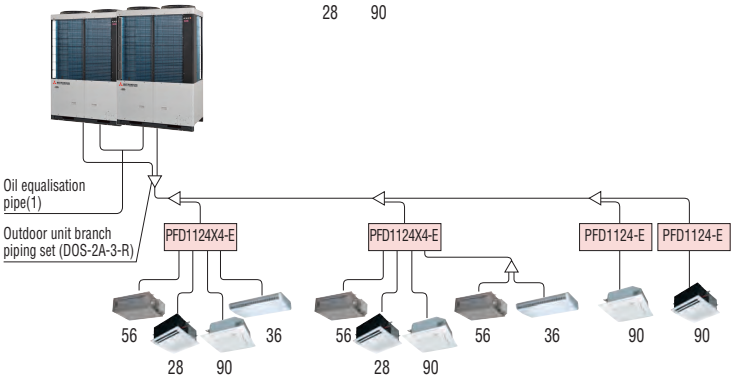

Outdoor unit's branch piping set

Outdoor unit	Branch piping set
2 units (for 735~1120)	DOS-2A-3-R
3 units (for 1200~1680)	DOS-3A-3-R

Indoor unit's first branch piping set

Total capacity of indoor units	Branch piping set
~179	DIS-22-1-RG
180~370	DIS-180-1-RG
371~539	DIS-371-2-RG
540~	DIS-540-2-RG

For Down Stream of PFD box

Total capacity of indoor units	Branch piping set
~179	DIS-22-1G
180~370	DIS-180-1G
371~539	DIS-371-1G
540~	DIS-540-3

Electrical wiring – power supply

KXZ has greatly simplified wiring requirements utilising a 'polarity-free' two wire control loop connecting the indoor units.

Power wiring

Cables can be laid through the front, right, left or bottom of the outdoor unit casing.
Separate power supplies should be used for the outdoor unit (3Phase) and the indoor units (1Phase).
Only control wiring is connected from outdoor to indoor unit.

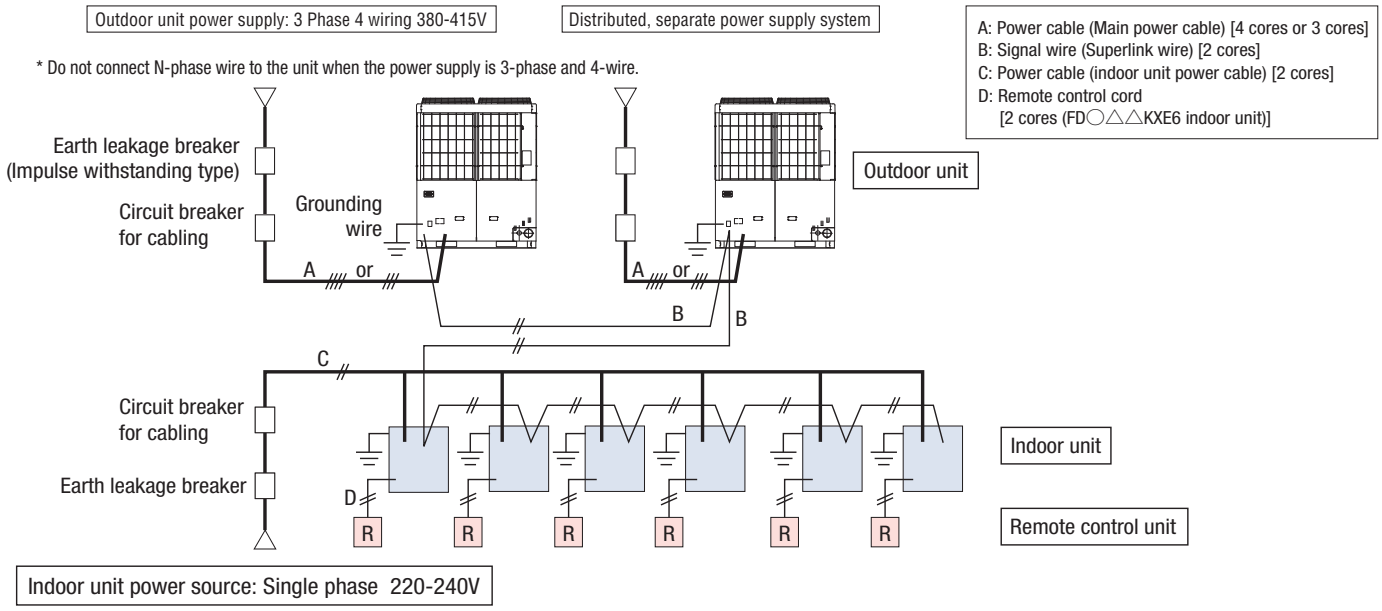

CAUTION

If the earth leakage breaker is exclusively for ground fault protection, then you will need to install a circuit breaker for wiring work.

Electrical wiring – control wiring

1. The control wiring is 5 Volt DC, non-polarised, two wire connection notated as 'A1' and 'B1'. This 'AB' wiring connects outdoor unit to indoor unit and indoor unit to indoor unit.
2. This wiring must be a 2-core shielded cable size 0.75mm² or 1.25mm².

	0.75mm²	1.25mm²
~1000m	YES	YES
1000~1500m	YES	NO

3. We recommend both ends of the shield of the cable are connected to ground (earth) at all the indoor units and outdoor units.
4. When multiple outdoor units are used,
   - Connect the signal cable between indoor and outdoor units and the signal cable between outdoor units belonging to the same refrigerant line to A1 and B1.
   - Connect the signal line between outdoor units on different refrigerant lines to A2 and B2.
5. For current specification of 2-core (AB) wiring, please consult your dealer.

(1) When one outdoor unit is used

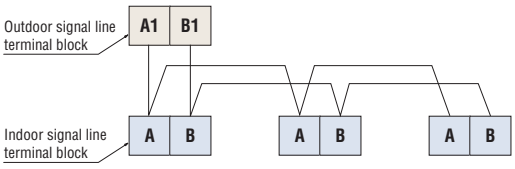

○ Indoor and outdoor signal lines do not have a polarity.
Any of the connections in the following illustration can be made.

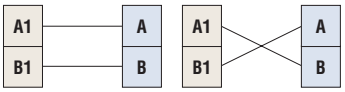

(2) When plural outdoor units are used

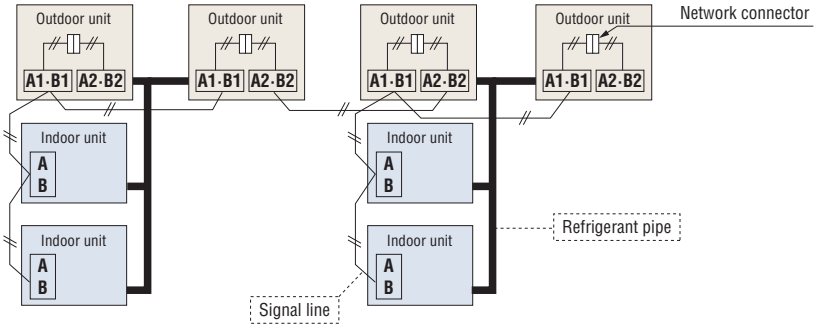

The maximum number of indoor units that can be connected in a system is 128 and it is possible to configure outdoor units and/or indoor units as an outdoor or indoor unit group connected with each other with two wires.

(3) The signal lines can also be connected using the method shown below.

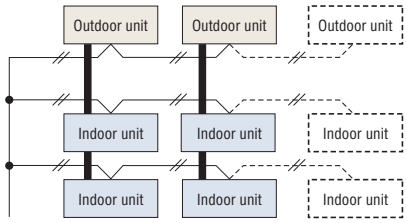

Important ○ Loop wiring prohibited

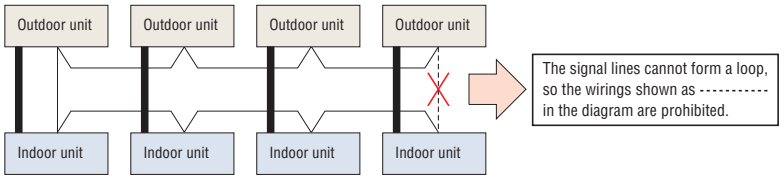

Remote control wiring specifications

For interconnecting wiring between the remote control and indoor units (XY wiring) use 2-core cable size 0.3mm². The maximum length of 2-core cable is 600 metres. Where the 2-core wiring exceeds 100m, use the wire size detailed on the table below.

Length (m)	Wire size
100 to 200	0.5mm² x 2 core
To 300	0.75mm² x 2 core
To 400	1.25mm² x 2 core
To 600	2.0mm² x 2 core

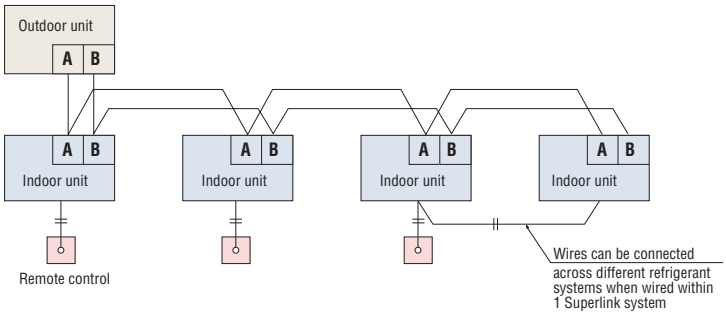

Indoor units

Benefits Summary

When using RC-EX3A (Remote control), functions with symbol ● are available.
However, for RC-E5 (Remote control), functions with ★ are not available.

Energy Saving	Inverter technology	Inverter control technology delivers high efficiency and a smooth operation from high speed to low speed. A smooth sine voltage wave is attained.
	Energy-saving★	Since the capacity is controlled automatically based on the outdoor temperature, energy can be saved without losing comfort.
	Motion sensor★	This sensor detects human activity and shifts the temperature setting according to the amount of activity in the room.
	Home leave operation★	This function ensures that when the room is unoccupied for long periods of time, the unit will maintain a moderate indoor temperature, avoiding extremely hot or cool temperatures.
	Set temperature auto return★	This function allows the user to program a preferred set temperature that the unit will return to each time it is operated.
Comfort	Automatic operation	This function automatically selects the required heating or cooling function based on the current room conditions.
	Silent operation	This function allows the user to program periods where the unit will operate with reduced noise levels, perfect for night time and an uninterrupted sleep.
	Hi power operation★	Use the high power function to quickly reach your optimum temperature level when you first turn on the unit. This function will operate for a maximum of 15 minutes before returning to normal operation.
Air flow	Flap control system	This function allows the user to set the upper and lower limit positions of the flap at each air outlet individually, providing you with complete control over interior air flow.
	Vertical auto swing	The vertical louvers on your unit will move up and down continuously during operation. This function allows you to set the up/down swing position of the louver to the preferred operation angle.
	Draft prevention setting★	Draft Prevention setting provides a comfortable air flow without any draft feeling. Whether cooling or heating a room, the remote control can be used to instantly suppress any warm or cool drafts. This accurately assists how air flow is directed out of the indoor unit.
	Automatic fan speed	The unit's on-board microcomputer continuously monitors the room's air temperature and adjusts the air flow automatically.
Timer	Sleep timer	This function allows the user to set a pre-determined amount of time between 30 and 240 minutes that your unit will operate for before switching off.
	Peak-cut timer★	This function lets the user to preset the capacity limit during certain periods of the day, minimising energy consumption during peak billing times, thus reducing operation costs.
	Weekly timer	Set the unit to turn on and off automatically on a weekly basis to suit your usual room usage on each day.
Convenient	Function Switch★	From the eight available functions on the unit, this function allows the user to set two functions to operate automatically.
	Favourite setting★	Operation mode, set temperature, fan speed and air flow direction automatically adjust to the programmed favourite setting.
	Static pressure adjustment	This is operable when connecting duct type indoor units equipped with the external static pressure adjustment function. It will adjust the airflow accordingly based on the connected duct static pressure.
	Select the language★	Set the language to be displayed on the remote control.
	Air filter	The air filter in the unit traps and removes airborne dust particles and other allergens to provide you clean air.
	Filter sign	This warning alerts when the filter needs to be cleaned.
	Outside air intake	This function provides clean fresh air into the room through the external air intake, avoiding the constant recycling of internal air.
Others	Self diagnostics	The internal microcomputer automatically runs a diagnostic of the system in the event of a malfunction. This enables authorised dealers to isolate and repair any issues.
	Built in drain pump	The built-in drain pump, allows greater flexibility with installation, offering a great solution for applications with limited space.
	Improved serviceability	The fan unit (comprised of impeller and motor) is easily accessible from either the side or bottom of the unit and can be slid out for easy maintenance.

FDT	FDTC	FDTW	FDTS	FDTQ	FDU	FDUM	FDUT	FDUH	FDK	FDE	FDFW	FDFL	FDFU	FDU-F
●	●	●	●	●	●	●	●	●	●	●	●	●	●	●
●	●	●	●	●	●	●	●	●	●	●	●	●	●	●
● Option	● Option	● Option	● Option	● Option	● Option	● Option	● Option	● Option	● Option	● Option		● Option	● Option	● Option
●	●	●	●	●	●	●	●	●	●	●	●	●	●	●
●	●	●	●	●	●	●	●	●	●	●	●	●	●	●
●	●	●	●	●	●	●	●	●	●	●	●	●	●	●
●	●	●	●	●	●	●	●	●	●	●	●	●	●	●
●	●	●	●	●	●	●	●	●	●	●	●	●	●	●
●	●	●	●						●	●	●			
●	●	●	●	●					●	●	●			
● Option	● Option													
●	●	●	●	●	●	●	●	●	●	●	●	●	●	●
●	●	●	●	●	●	●	●	●	●	●	●	●	●	●
●	●	●	●	●	●	●	●	●	●	●	●	●	●	●
●	●	●	●	●	●	●	●	●	●	●	●	●	●	●
●	●	●	●	●	●	●	●	●	●	●	●	●	●	●
●	●	●	●	●	●	●	●	●	●	●	●	●	●	●
					●	●	● (71only)							●
●	●	●	●	●	●	●	●	●	●	●	●	●	●	●
●	●	●	●	●	procure locally	● Option	● Option	● Option	●	●	●	●	●	procure locally
●	●	●	●	●	●	●	●	●	●	●	●	●	●	●
●	● Option	●	●	●	●	●	●	●						●
●	●	●	●	●	●	●	●	●	●	●	●	●	●	●
●	●	●	●	●	● ⋆1	●	●	● Option						● ⋆2
					●	●								

⋆1 : Except 224 • 280 ⋆2 : Except 1800 • 2400

Ceiling Cassette -4way-
FDT

Model No.

FDT28KXZE1-W	FDT28KXZE1
FDT36KXZE1-W	FDT36KXZE1
FDT45KXZE1-W	FDT45KXZE1
FDT56KXZE1-W	FDT56KXZE1
FDT71KXZE1-W	FDT71KXZE1
FDT90KXZE1-W	FDT90KXZE1
FDT112KXZE1-W	FDT112KXZE1
FDT140KXZE1-W	FDT140KXZE1
FDT160KXZE1-W	FDT160KXZE1

Draft Prevention Panel (Option)

Remote control (option)

Wired

RC-EX3A **RC-E5** **RCH-E3**

Wireless

RCN-T-5BW-E2(White)
RCN-T-5BB-E2(Black)

*R32 indoor unit are not compatible with R410A outdoor unit and vice versa.

Draft Prevention Panel (Option)

This prevents cold/hot draft being blown directly on the user.
It is possible to set Draft Prevention Panel for each air outlet.

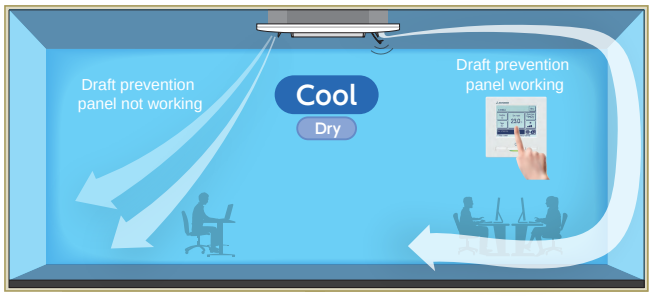

User can position panels by using the remote controller (RC-EX3A, Wireless kit) only when Draft Prevention Panel is available.

Advanced airflow control technology cultivated through aircraft development.

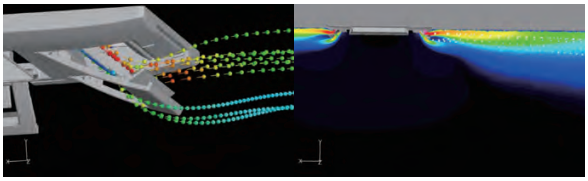

Draft Prevention Panel working

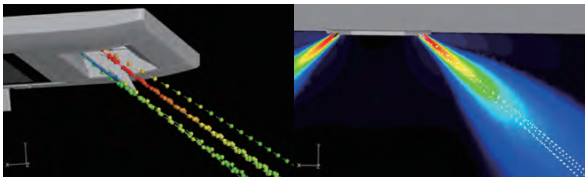

Draft Prevention Panel placed at off position

Motion Sensor (Option)

Motion sensor is equipped in the corner of the panel and detects the presence/absence and activity of humans in a room to improve the comfort and energy saving performance of the unit.

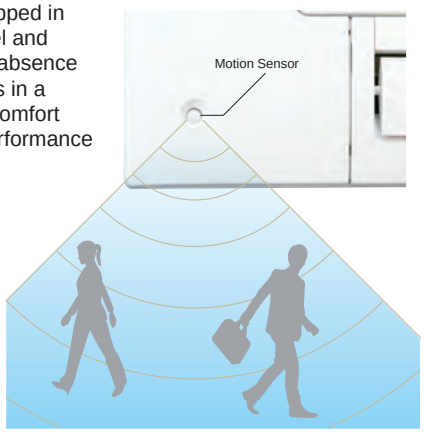

LB-T-5BW-E(White)
LB-T-5BB-E(Black)

Improve the aerodynamic performance of the unit

New designed component has better aerodynamic performance and achieve lower noise.

New design turbo fan

Fan guard (standard equipment)

Panel select pattern (Option)

8 patterns of panel are available.

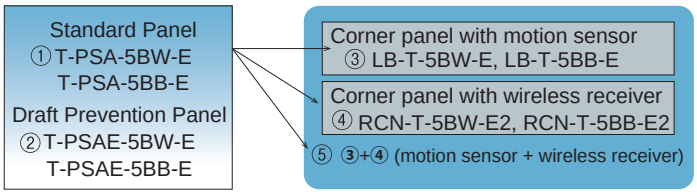

Installation position of Wireless kit and Motion sensor kit

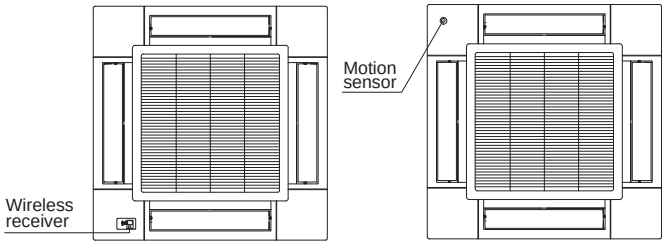

*Wireless receiver and Motion sensor can be installed to the position as shown

① Standard Panel only
①+③ Standard Panel with corner panel with motion sensor
①+④ Standard Panel with corner panel with wireless receiver
①+⑤ Standard Panel with corner panel with motion sensor & corner panel with wireless receiver

② Draft Prevention Panel only
②+③ Draft Prevention Panel with corner panel with motion sensor
②+④ Draft Prevention Panel with corner panel with wireless receiver
②+⑤ Draft Prevention Panel with corner panel with motion sensor & corner panel with wireless receiver

Individual flap control system

According to room conditions, four directions of air flow can be controlled individually by utilizing the flap control system.
Individual flap control is available even after installation.

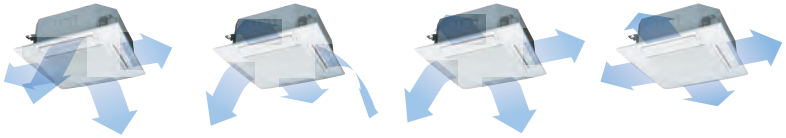

Flap can swing within an upper and lower flap range position that can be selected with a wired remote control.

※The wireless remote control is not applicable to the Individual flap control system.

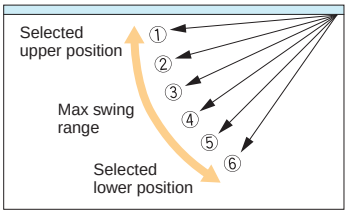

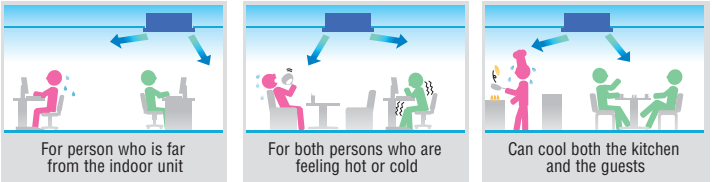

850mm Drain Pump

Drain can be discharged upwards up to 850mm from the ceiling surface, allowing a piping layout with a high degree of freedom. Thanks to the 185mm flexible hose, equipment supports easy workability.

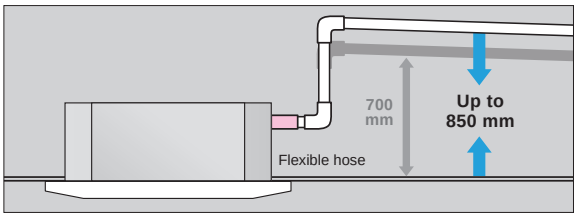

Suitable for High ceilings

The Powerful blowout carries comfortable air flow to the floor even in high ceiling applications. It is ideal for high ceiling offices, stores, etc., with a wide, uniform air flow throughout the room.

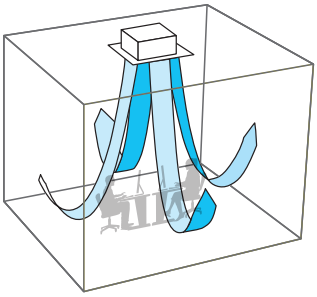

Easy check of drain pan

Easy inspection of the condition of the drain pan is possible by removing only the corner lid.

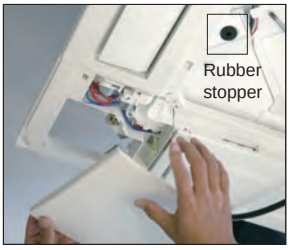

Remove corner lid.

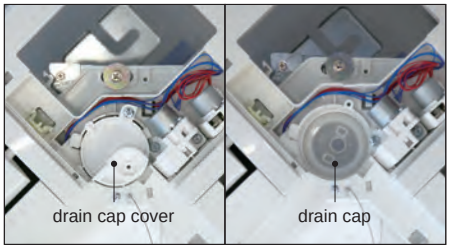

Remove drain cap cover and check the condition.
It is necessary to clean-up, firstly remove the rubber stopper to drain water out and secondly remove the drain cap.

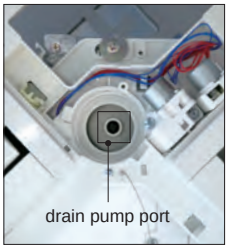

Clean up the area around the drain pump port.

Specifications R32

Item		Model	FDT28KXZE1-W	FDT36KXZE1-W	FDT45KXZE1-W	FDT56KXZE1-W	FDT71KXZE1-W
Nominal cooling capacity		kW	2.8	3.6	4.5	5.6	7.1
Nominal heating capacity		kW	3.2	4.0	5.0	6.3	8.0
Power source			1 Phase 220-240V, 50Hz				
Power consumption	Cooling	kW	0.04-0.04			0.07-0.07	0.08-0.08
	Heating		0.04-0.04			0.07-0.07	0.08-0.08
Sound power level		dB(A)	55			60	62
Sound pressure level	Cooling	dB(A)	P-Hi:40 Hi:32 Me:30 Lo:28	P-Hi:40 Hi:34 Me:30 Lo:28	P-Hi:40 Hi:34 Me:31 Lo:28	P-Hi:44 Hi:34 Me:31 Lo:28	P-Hi:47 Hi:35 Me:32 Lo:28
	Heating		P-Hi:40 Hi:31 Me:29 Lo:26	P-Hi:40 Hi:33 Me:29 Lo:26	P-Hi:40 Hi:33 Me:30 Lo:26	P-Hi:44 Hi:34 Me:30 Lo:27	P-Hi:47 Hi:35 Me:32 Lo:28
Exterior dimensions (H x W x D)		mm	Unit:236x840x840 Panel:35x950x950				
Net weight		kg	Unit:20 Standard Panel:5			Unit:21.5 Standard Panel:5	
Air flow	Cooling	m^3/min	P-Hi:20 Hi:14 Me:12 Lo:10	P-Hi:20 Hi:15 Me:12 Lo:10	P-Hi:20 Hi:15 Me:13 Lo:10	P-Hi:26 Hi:16 Me:13 Lo:11	P-Hi:28 Hi:17 Me:14 Lo:12
	Heating		P-Hi:20 Hi:14 Me:12 Lo:11	P-Hi:20 Hi:15 Me:12 Lo:11	P-Hi:20 Hi:15 Me:13 Lo:11		
Outside air intake			Possible				
Panel			T-PSA-5BW-E, T-PSAE-5BW-E (White) / T-PSA-5BB-E, T-PSAE-5BB-E (Black)				
Air filter, Q'ty			Pocket Plastic net x1 (Washable)				
Remote control (option)			wired:RC-EX3A, RC-E5, RCH-E3 wireless:RCN-T-5BW-E2, RCN-T-5BB-E2				
Installation data Refrigerant piping size		mm(in)	Liquid line:ø6.35(1/4") Gas line:ø9.52(3/8")	Liquid line:ø6.35(1/4") Gas line:ø12.7(1/2")			Liquid line:ø9.52(3/8") Gas line:ø15.88(5/8")

Item		Model	FDT90KXZE1-W	FDT112KXZE1-W	FDT140KXZE1-W	FDT160KXZE1-W
Nominal cooling capacity		kW	9.0	11.2	14.0	16.0
Nominal heating capacity		kW	10.0	12.5	16.0	18.0
Power source			1 Phase 220-240V, 50Hz			
Power consumption	Cooling	kW	0.13-0.13	0.14-0.14		
	Heating		0.13-0.13	0.14-0.14		
Sound power level		dB(A)	65		66	
Sound pressure level	Cooling	dB(A)	P-Hi:49 Hi:38 Me:36 Lo:31	P-Hi:49 Hi:39 Me:37 Lo:31	P-Hi:49 Hi:42 Me:39 Lo:32	P-Hi:49 Hi:42 Me:39 Lo:32
	Heating		P-Hi:49 Hi:38 Me:36 Lo:30	P-Hi:49 Hi:39 Me:37 Lo:30	P-Hi:49 Hi:42 Me:39 Lo:31	P-Hi:49 Hi:42 Me:39 Lo:31
Exterior dimensions (H x W x D)		mm	Unit:298x840x840 Panel:35x950x950			
Net weight		kg	Unit:25 Standard Panel:5			
Air flow	Cooling	m^3/min	P-Hi:37 Hi:25 Me:22 Lo:15	P-Hi:38 Hi:26 Me:23 Lo:17	P-Hi:38 Hi:28 Me:25 Lo:18	P-Hi:38 Hi:29 Me:26 Lo:19
	Heating					
Outside air intake			Possible			
Panel			T-PSA-5BW-E, T-PSAE-5BW-E (White) / T-PSA-5BB-E, T-PSAE-5BB-E (Black)			
Air filter, Q'ty			Pocket Plastic net x1 (Washable)			
Remote control (option)			wired:RC-EX3A, RC-E5, RCH-E3 wireless:RCN-T-5BW-E2, RCN-T-5BB-E2			
Installation data Refrigerant piping size		mm(in)	Liquid line:ø9.52(3/8") Gas line:ø15.88(5/8")			

1. The data are measured under the following conditions(ISO-T1). Cooling: Indoor temp. of 27ºCDB, 19ºCWB, and outdoor temp. of 35ºCDB. Heating: Indoor temp. of 20ºCDB, and outdoor temp. of 7ºCDB, 6ºCWB.
2. Sound pressure level indicates the value in an anechoic chamber. During operation these values are somewhat higher due to ambient conditions.

Specifications R410A

Item		Model	FDT28KXZE1	FDT36KXZE1	FDT45KXZE1	FDT56KXZE1	FDT71KXZE1
Nominal cooling capacity		kW	2.8	3.6	4.5	5.6	7.1
Nominal heating capacity		kW	3.2	4.0	5.0	6.3	8.0
Power source			1 Phase 220-240V, 50Hz				
Power consumption	Cooling	kW	0.04-0.04			0.07-0.07	0.08-0.08
	Heating		0.04-0.04			0.07-0.07	0.08-0.08
Sound power level		dB(A)	55			60	62
Sound pressure level	Cooling	dB(A)	P-Hi:38 Hi:33 Me:30 Lo:28		P-Hi:38 Hi:33 Me:31 Lo:29	P-Hi:44 Hi:33 Me:31 Lo:29	P-Hi:47 Hi:35 Me:32 Lo:28
	Heating						
Exterior dimensions (H x W x D)		mm	Unit:236x840x840 Panel:35x950x950				
Net weight		kg	Unit:20 Standard Panel:5			Unit:21.5 Standard Panel:5	
Air flow	Cooling	m^3/min	P-Hi:20 Hi:14 Me:12 Lo:10	P-Hi:20 Hi:14 Me:12 Lo:10	P-Hi:20 Hi:15 Me:13 Lo:10	P-Hi:26 Hi:16 Me:13 Lo:11	P-Hi:28 Hi:17 Me:14 Lo:12
	Heating						
Outside air intake			Possible				
Panel			T-PSA-5BW-E, T-PSAE-5BW-E (White) / T-PSA-5BB-E, T-PSAE-5BB-E (Black)				
Air filter, Q'ty			Pocket Plastic net x1 (Washable)				
Remote control (option)			wired:RC-EX3A, RC-E5, RCH-E3 wireless:RCN-T-5BW-E2, RCN-T-5BB-E2				
Installation data Refrigerant piping size		mm(in)	Liquid line:ø6.35(1/4") Gas line:ø9.52(3/8")	Liquid line:ø6.35(1/4") Gas line:ø12.7(1/2")			Liquid line:ø9.52(3/8") Gas line:ø15.88(5/8")

Item		Model	FDT90KXZE1	FDT112KXZE1	FDT140KXZE1	FDT160KXZE1
Nominal cooling capacity		kW	9.0	11.2	14.0	16.0
Nominal heating capacity		kW	10.0	12.5	16.0	18.0
Power source			1 Phase 220-240V, 50Hz			
Power consumption	Cooling	kW	0.13-0.13	0.14-0.14		
	Heating		0.13-0.13	0.14-0.14		
Sound power level		dB(A)	65	66		
Sound pressure level	Cooling	dB(A)	P-Hi:49 Hi:38 Me:36 Lo:31	P-Hi:49 Hi:39 Me:37 Lo:31	P-Hi:49 Hi:42 Me:39 Lo:32	P-Hi:49 Hi:42 Me:39 Lo:33
	Heating					
Exterior dimensions (H x W x D)		mm	Unit:298x840x840 Panel:35x950x950			
Net weight		kg	Unit:25 Standard Panel:5			
Air flow	Cooling	m^3/min	P-Hi:37 Hi:25 Me:22 Lo:15	P-Hi:38 Hi:26 Me:23 Lo:17	P-Hi:38 Hi:28 Me:25 Lo:18	P-Hi:38 Hi:29 Me:26 Lo:19
	Heating					
Outside air intake			Possible			
Panel			T-PSA-5BW-E, T-PSAE-5BW-E (White) / T-PSA-5BB-E, T-PSAE-5BB-E (Black)			
Air filter, Q'ty			Pocket Plastic net x1 (Washable)			
Remote control (option)			wired:RC-EX3A, RC-E5, RCH-E3 wireless:RCN-T-5BW-E2, RCN-T-5BB-E2			
Installation data Refrigerant piping size		mm(in)	Liquid line:ø9.52(3/8") Gas line:ø15.88(5/8")			

1. The data are measured under the following conditions(ISO-T1). Cooling: Indoor temp. of 27ºCDB, 19ºCWB, and outdoor temp. of 35ºCDB. Heating: Indoor temp. of 20ºCDB, and outdoor temp. of 7ºCDB, 6ºCWB.
2. Sound pressure level indicates the value in an anechoic chamber. During operation these values are somewhat higher due to ambient conditions.

Dimensions

All measurements in mm.

FDT28KXZE1-W, 36KXZE1-W, 45KXZE1-W, 56KXZE1-W, 71KXZE1-W

FDT28KXZE1, 36KXZE1, 45KXZE1, 56KXZE1, 71KXZE1

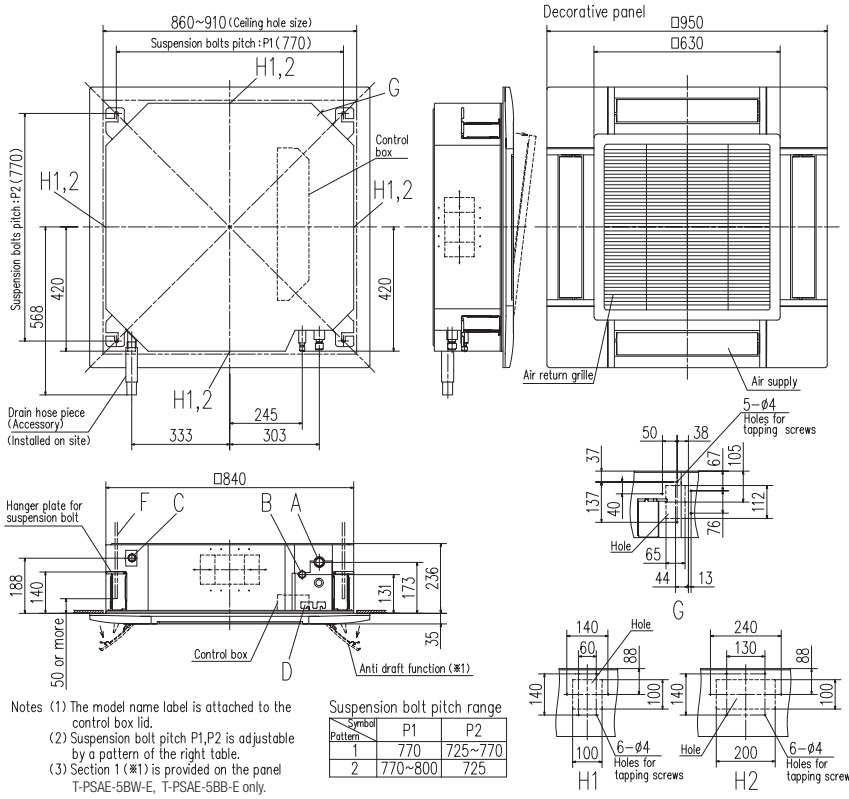

Symbol	Content			
	Model	28	36,45,56	71
A	Gas piping	φ9.52 (3/8") (Flare)	φ12.7 (1/2") (Flare)	φ15.88 (5/8") (Flare)
B	Liquid piping	φ6.35 (1/4") (Flare)		φ9.52 (3/8") (Flare)
C	Drain piping	VP25 (O.D.32)		
D	Hole for wiring			
F	Suspension bolts	(M10 or M8)		
G	Outside air opening for ducting	(Knock out)		
H1	Air outlet opening for ducting	φ125 (Knock out)		
H2		φ200 (Knock out)		

Space for installation and service

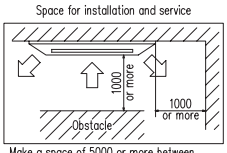

Make a space of 5000 or more between the units when installing more than one.

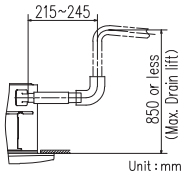

Notes (1) The model name label is attached to the control box lid.
(2) Suspension bolt pitch P1,P2 is adjustable by a pattern of the right table.
(3) Section 1 (※1) is provided on the panel T-PSAE-5BW-E, T-PSAE-5BB-E only.

Suspension bolt pitch range

Symbol / Pattern	P1	P2
1	770	725~770
2	770~800	725

FDT90KXZE1-W, 112KXZE1-W, 140KXZE1-W, 160KXZE1-W

FDT90KXZE1, 112KXZE1, 140KXZE1, 160KXZE1

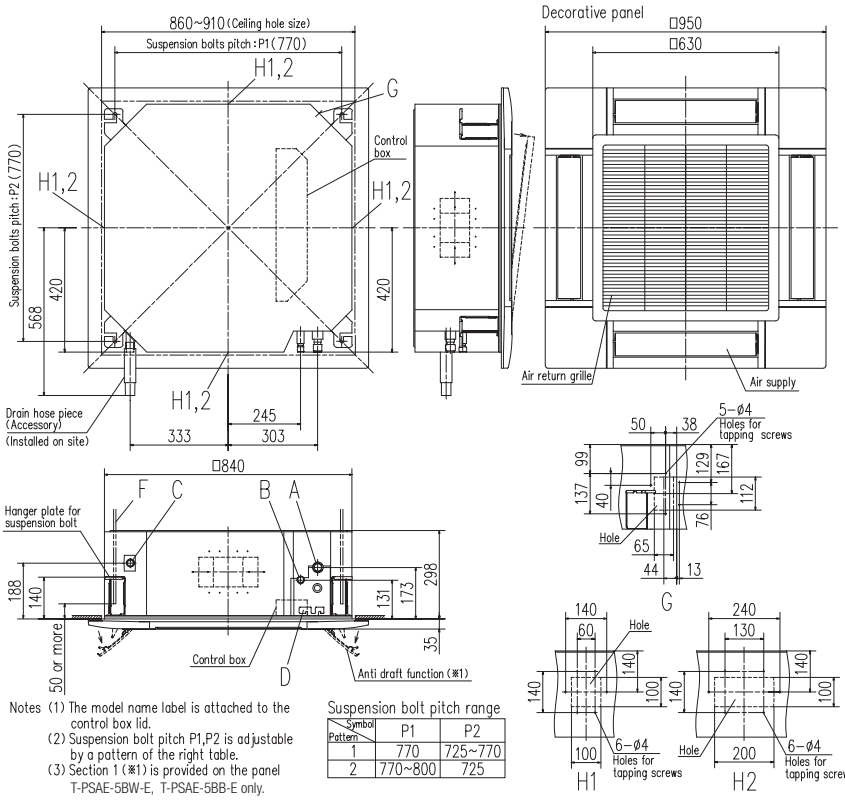

Symbol	Content	
A	Gas piping	φ15.88 (5/8") (Flare)
B	Liquid piping	φ9.52 (3/8") (Flare)
C	Drain piping	VP25 (O.D.32)
D	Hole for wiring	
F	Suspension bolts	(M10 or M8)
G	Outside air opening for ducting	(Knock out)
H1	Air outlet opening for ducting	φ125 (Knock out)
H2		φ200 (Knock out)

Space for installation and service

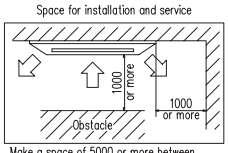

Make a space of 5000 or more between the units when installing more than one.

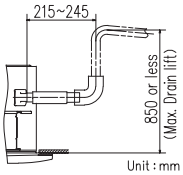

Notes (1) The model name label is attached to the control box lid.
(2) Suspension bolt pitch P1,P2 is adjustable by a pattern of the right table.
(3) Section 1 (※1) is provided on the panel T-PSAE-5BW-E, T-PSAE-5BB-E only.

Suspension bolt pitch range

Symbol / Pattern	P1	P2
1	770	725~770
2	770~800	725

Ceiling Cassette - 4way Compact FDTC

Model No.
FDTC15KXZE1-W
FDTC22KXZE1-W
FDTC28KXZE1-W
FDTC36KXZE1-W
FDTC45KXZE1-W
FDTC56KXZE1-W

FDTC15KXZE1
FDTC22KXZE1
FDTC28KXZE1
FDTC36KXZE1
FDTC45KXZE1
FDTC56KXZE1

*R32 indoor unit are not compatible with R410A outdoor unit and vice versa.

NEW

Draft Prevention Panel (option)

Grid type

Remote control (option)

Wired

RC-EX3A **RC-E5** **RCH-E3**

Wireless

RCN-TC-5AW-E3

European design & Flat panel

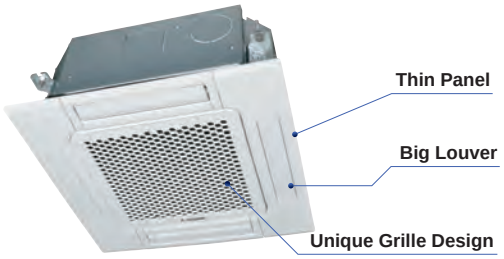

Unique Grille Design

A grille designed with a unique structure and a clean white panel that blends with the room.

Honeycomb type

NEW

Grid type

Integrated ceiling system design 600x600

Easy installation - with a weight of only 14kg, a thin panel, and a main body size of only 248mm.

Taking OA (Outside Air) into inside

Fresh air can be taken in without optional parts. When the fresh air is insufficient, optional parts can be used.

OA Spacer TC-OAS-E2(option)
Joint Duct TC-OAD-E(option)

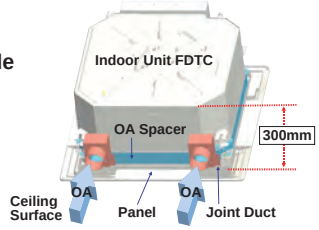

Draft Prevention Panel (Option)

This prevents cold/hot draft being blown directly on the user. It is possible to set Draft Prevention Panel for each air outlet.

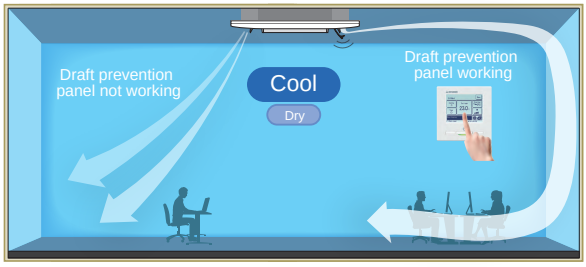

User can position panels by using the remote controller (RC-EX3A, Wireless kit) only when Draft Prevention Panel is available.

Motion Sensor (Option)

Motion sensor is equipped in the corner of the panel and detects the presence/absence and activity of humans in a room to improve the comfort and energy saving performance of the unit.

LB-TC-5W-E

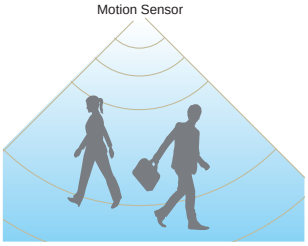

Panel select pattern (Option)

8 patterns of panel are available.

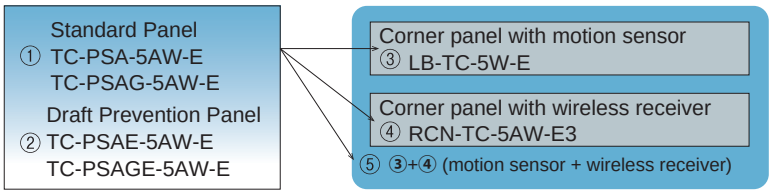

① Standard Panel only
①+③ Standard Panel with corner panel with motion sensor
①+④ Standard Panel with corner panel with wireless receiver
①+⑤ Standard Panel with corner panel with motion sensor & corner panel with wireless receiver

② Draft Prevention Panel only
②+③ Draft Prevention Panel with corner panel with motion sensor
②+④ Draft Prevention Panel with corner panel with wireless receiver
②+⑤ Draft Prevention Panel with corner panel with motion sensor & corner panel with wireless receiver

Individual flap control system

According to room temperature conditions, four directions of air flow can be controlled individually by following Flap control system. Individual flap control is available even after installation.

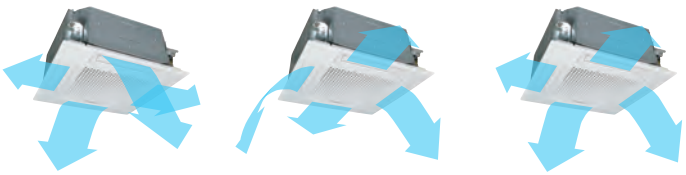

The flap can swing within the range of upper and lower flap position selected with wired remote control.

※The wireless remote control is not applicable to the Individual flap control system.

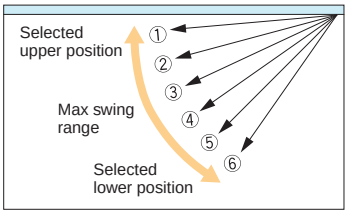

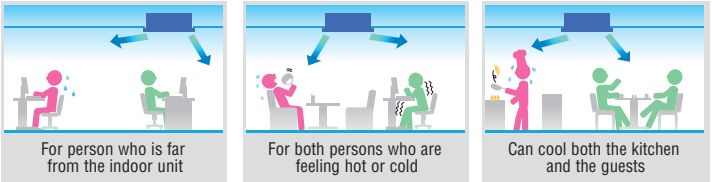

850mm Drain Pump

Drain can be discharged upward by 850 mm from the ceiling surface close to the indoor unit. It allows a piping layout with a high degree of freedom depending on the installation location.

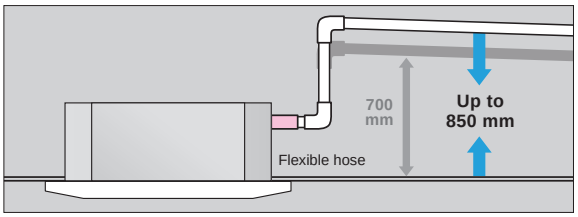

Suitable for High ceilings

The Powerful blowout carries comfortable air flow to the floor even in high ceiling applications. It is ideal for high ceiling offices, stores, etc., with a wide, uniform air flow throughout the room.

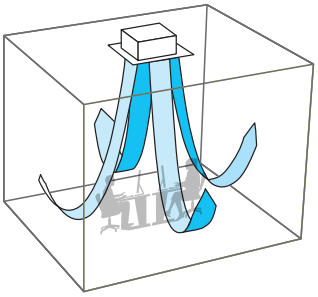

Specifications R32

Item		Model	FDTC15KXZE1-W	FDTC22KXZE1-W	FDTC28KXZE1-W	FDTC36KXZE1-W	FDTC45KXZE1-W	FDTC56KXZE1-W
Nominal cooling capacity		kW	1.5	2.2	2.8	3.6	4.5	5.6
Nominal heating capacity		kW	1.7	2.5	3.2	4.0	5.0	6.3
Power source			1 Phase 220-240V, 50Hz					
Power consumption	Cooling	kW	0.03-0.03			0.04-0.04	0.05-0.05	0.06-0.06
	Heating		0.03-0.03			0.04-0.04	0.05-0.05	0.06-0.06
Sound power level		dB(A)	Cooling:47 Heating:46	49		Cooling:54 Heating:53	Cooling:58 Heating:57	60
Sound pressure level	Cooling	dB(A)	P-Hi:33 Hi:30 Me:28 Lo:25	P-Hi:35 Hi:32 Me:29 Lo:25		P-Hi:39 Hi:36 Me:31 Lo:26	P-Hi:43 Hi:39 Me:36 Lo:28	P-Hi:47 Hi:43 Me:39 Lo:31
	Heating		P-Hi:33 Hi:30 Me:26 Lo:22					
Exterior dimensions (H x W x D)		mm	Unit:248x570x570 Panel:10x620x620					
Net weight		kg	Unit:12.5 Standard Panel:2.5	Unit:13 Standard Panel:2.5		Unit:14 Standard Panel:2.5		
Air flow	Cooling	m^3/min	P-Hi:8 Hi:7 Me:6 Lo:5	P-Hi:9 Hi:8 Me:7 Lo:6		P-Hi:10 Hi:9 Me:8 Lo:6	P-Hi:12 Hi:10 Me:9 Lo:7	P-Hi:14 Hi:12 Me:10 Lo:8
	Heating							
Outside air intake			Possible					
Panel			TC-PSA-5AW-E, TC-PSAE-5AW-E (Honeycomb) / TC-PSAG-5AW-E, TC-PSAGE-5AW-E (Grid)					
Air filter, Q'ty			Pocket Plastic net x1 (Washable)					
Remote control (option)			wired:RC-EX3A, RC-E5, RCH-E3 wireless:RCN-TC-5AW-E3					
Installation data Refrigerant piping size		mm(in)	Liquid line:ø6.35(1/4") Gas line:ø9.52(3/8")			Liquid line:ø6.35(1/4") Gas line:ø12.7(1/2")		

1. The data are measured under the following conditions(ISO-T1). Cooling: Indoor temp. of 27ºCDB, 19ºCWB, and outdoor temp. of 35ºCDB. Heating: Indoor temp. of 20ºCDB, and outdoor temp. of 7ºCDB, 6ºCWB.
2. Sound pressure level indicates the value in an anechoic chamber. During operation these values are somewhat higher due to ambient conditions.

Specifications R410A

Item		Model	FDTC15KXZE1	FDTC22KXZE1	FDTC28KXZE1	FDTC36KXZE1	FDTC45KXZE1	FDTC56KXZE1
Nominal cooling capacity		kW	1.5	2.2	2.8	3.6	4.5	5.6
Nominal heating capacity		kW	1.7	2.5	3.2	4.0	5.0	6.3
Power source			1 Phase 220-240V, 50Hz					
Power consumption	Cooling	kW	0.03-0.03			0.04-0.04	0.05-0.05	0.06-0.06
	Heating		0.03-0.03			0.04-0.04	0.05-0.05	0.06-0.06
Sound power level		dB(A)	Cooling:47 Heating:46	49		Cooling:54 Heating:53	Cooling:58 Heating:57	60
Sound pressure level	Cooling	dB(A)	P-Hi:33 Hi:30 Me:28 Lo:25	P-Hi:35 Hi:32 Me:29 Lo:25		P-Hi:39 Hi:36 Me:31 Lo:26	P-Hi:43 Hi:39 Me:36 Lo:28	P-Hi:47 Hi:43 Me:39 Lo:31
	Heating		P-Hi:33 Hi:30 Me:26 Lo:22					
Exterior dimensions (H x W x D)		mm	Unit:248x570x570 Panel:10x620x620					
Net weight		kg	Unit:12.5 Standard Panel:2.5	Unit:13 Standard Panel:2.5		Unit:14 Standard Panel:2.5		
Air flow	Cooling	m^3/min	P-Hi:8 Hi:7 Me:6 Lo:5	P-Hi:9 Hi:8 Me:7 Lo:6		P-Hi:10 Hi:9 Me:8 Lo:6	P-Hi:12 Hi:10 Me:9 Lo:7	P-Hi:14 Hi:12 Me:10 Lo:8
	Heating							
Outside air intake			Possible					
Panel			TC-PSA-5AW-E, TC-PSAE-5AW-E (Honeycomb) / TC-PSAG-5AW-E, TC-PSAGE-5AW-E (Grid)					
Air filter, Q'ty			Pocket Plastic net x1 (Washable)					
Remote control (option)			wired:RC-EX3A, RC-E5, RCH-E3 wireless:RCN-TC-5AW-E3					
Installation data Refrigerant piping size		mm(in)	Liquid line:ø6.35(1/4") Gas line:ø9.52(3/8")			Liquid line:ø6.35(1/4") Gas line:ø12.7(1/2")		

1. The data are measured under the following conditions(ISO-T1). Cooling: Indoor temp. of 27ºCDB, 19ºCWB, and outdoor temp. of 35ºCDB. Heating: Indoor temp. of 20ºCDB, and outdoor temp. of 7ºCDB, 6ºCWB.
2. Sound pressure level indicates the value in an anechoic chamber. During operation these values are somewhat higher due to ambient conditions.

Dimensions

All measurements in mm.

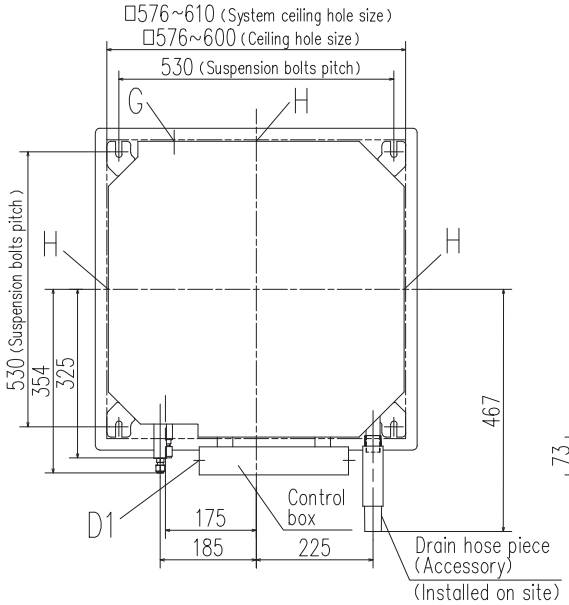

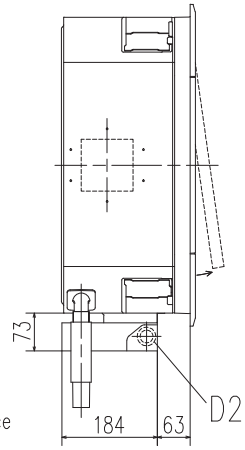

Decorative panel (Honeycomb type)

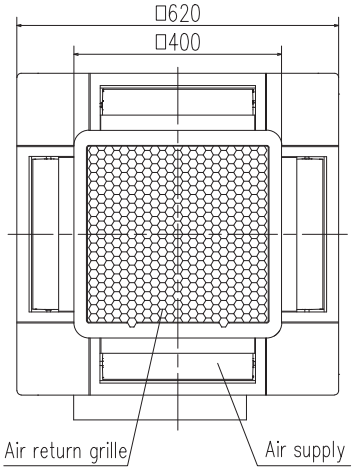

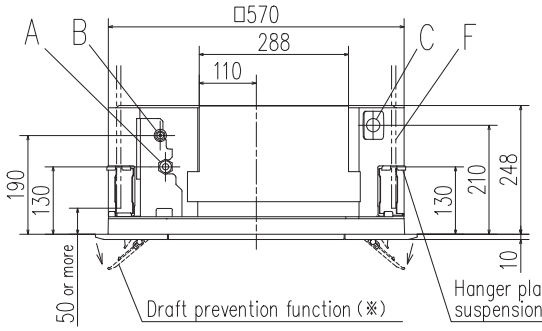

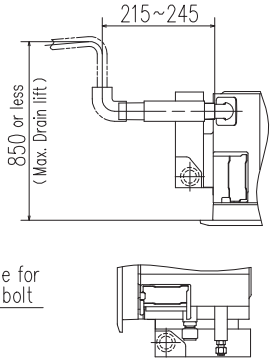

Decorative panel (Grid type)

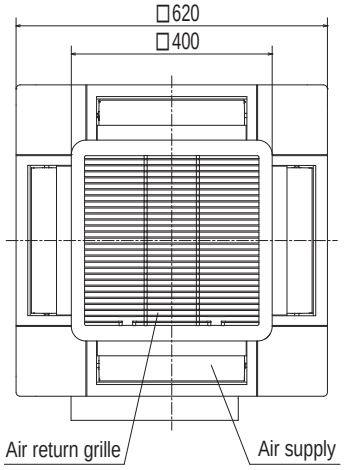

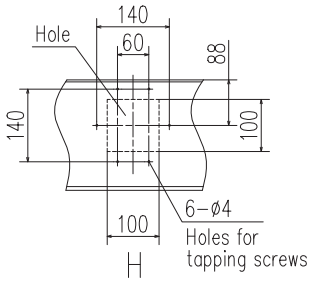

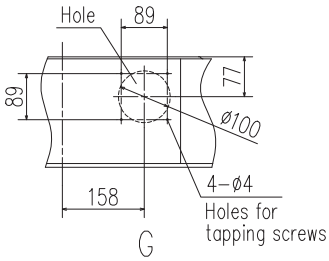

Space for installation and service

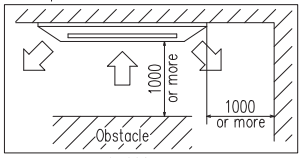

Make a space of 4000 or more between the units when installing more than one.

Inspection opening (Refer to note (2))

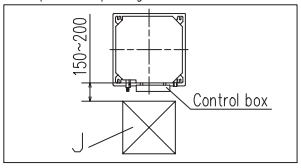

Symbol	Content		
	Model	15,22,28	36,45,56
A	Gas piping	φ9.52 (3/8") (Flare)	φ12.7 (1/2") (Flare)
B	Liquid piping	φ6.35 (1/4") (Flare)	
C	Drain piping	VP25 (O.D.32)	
D1	Power source connection		
D2	Remote control code and signal wiring connection		
F	Suspension bolts	(M10 or M8)	
G	Outside air opening for ducting	(Knock out)	
H	Air outlet opening for ducting	φ125 (Knock out)	
J	Inspection opening	450X450	

Notes (1) The model name label is attached to the control box lid.
(2) This unit is designed for 2x2 grid ceiling.
If it is installed on a ceiling other than 2x2 grid ceiling, provide an inspection opening on the control box side.
(3) Draft prevention function (※) is provided on the panel TC-PSAE-5AW-E, TC-PSAGE-5AW-E only.

Ceiling Cassette -2way- FDTW

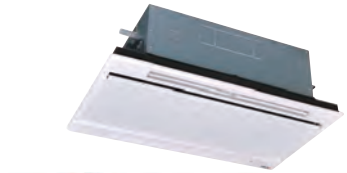

FDTW28~71

FDTW90~140

Remote control (option)

Wired

RC-EX3A RC-E5 RCH-E3

Wireless

RCN-TW-E2

Model No.

FDTW28KXE6F
FDTW45KXE6F
FDTW56KXE6F
FDTW71KXE6F
FDTW90KXE6F
FDTW112KXE6F
FDTW140KXE6F

Individual flap control system

We've optimised our outlet design with advanced technology to allow you to control up to four directions of air flow. Allowing you to control air direction via the flap systems and room temperature.

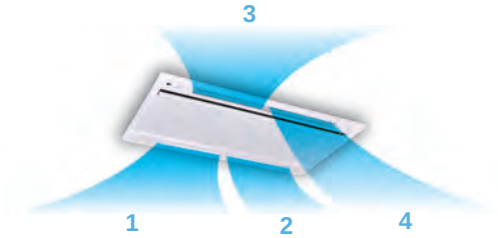

The flap can swing within the range of upper and lower flap position selected with wired control.

* The wireless remote control is not applicable with the individual flap control system.

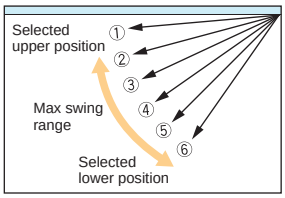

750mm Drain Pump

The drain discharge system allows for a piping layout with a high degree of freedom (dependent on installation location). Discharge from above 750mm from a ceiling surface to the indoor unit.

Installation workability

Drainage spout

Drainage flow test can be done easily by use of this drainage spout.

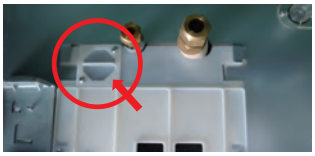

Transparent access hole to drain pan

Condition of the bottom of a drain pan can be checked through this transparent access hole without removing drain pan.

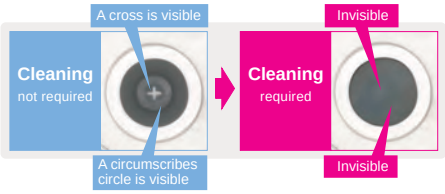

Motion Sensor (Option)

Motion sensor is equipped in the corner of the panel and detects the presence/absence and activity of humans in a room to improve the comfort and energy saving performance of the unit.

LB-TW-6W

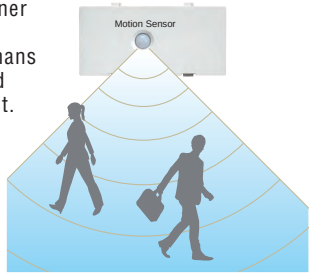

Specifications

Item		Model	FDTW28KXE6F	FDTW45KXE6F	FDTW56KXE6F	FDTW71KXE6F	FDTW90KXE6F	FDTW112KXE6F	FDTW140KXE6F
Nominal cooling capacity		kW	2.8	4.5	5.6	7.1	9.0	11.2	14.0
Nominal heating capacity		kW	3.2	5.0	6.3	8.0	10.0	12.5	16.0
Power source			1 Phase 220-240V, 50Hz						
Power consumption	Cooling	kW	0.09-0.09	0.10-0.10		0.14-0.14	0.19-0.19		
	Heating		0.09-0.09	0.10-0.10		0.14-0.14	0.19-0.19		
Sound power level		dB(A)	58				65		
Sound pressure level		dB(A)	P-Hi:42 Hi:38 Me:34 Lo:31				P-Hi:48 Hi:45 Me:41 Lo:37		
Exterior dimensions H x W x D		mm	Unit:325x820x620 Panel:20x1120x680				Unit:325x1535x620 Panel:20x1835x680		
Net weight		kg	Unit:20 Panel:8.5	Unit:21 Panel:8.5		Unit:23 Panel:8.5	Unit:35 Panel:13		
Air flow		m³/min	P-Hi:14.5 Hi:12 Me:10 Lo:9				P-Hi:31 Hi:27 Me:23 Lo:20		
Outside air intake			Possible						
Panel			TW-PSA-26W-E				TW-PSA-46W-E		
Air filter, Q'ty			Pocket Plastic net x2 (Washable)				Pocket Plastic net x3 (Washable)		
Remote control(option)			wired:RC-EX3A, RC-E5, RCH-E3 wireless:RCN-TW-E2						
Installation data Refrigerant piping size		mm(in)	Liquid line:ø6.35(1/4") Gas line:ø9.52(3/8")	Liquid line:ø6.35(1/4") Gas line:ø12.7(1/2")		Liquid line:ø9.52(3/8") Gas line:ø15.88(5/8")			

1. The data are measured under the following conditions(ISO-T1). Cooling: Indoor temp. of 27ºCDB, 19ºCWB, and outdoor temp. of 35ºCDB. Heating: Indoor temp. of 20ºCDB, and outdoor temp. of 7ºCDB, 6ºCWB.
2. Sound pressure level indicates the value in an anechoic chamber. During operation these values are somewhat higher due to ambient conditions.

Dimensions

All measurements in mm.

FDTW28KXE6F, 45KXE6F, 56KXE6F, 71KXE6F

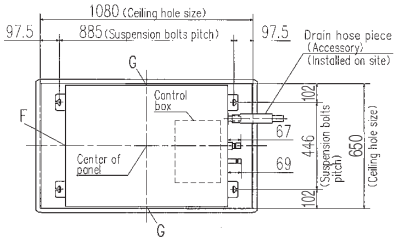

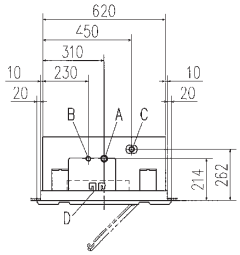

Symbo	Content			
	Model	28	45,56	71
A	Gas piping	ϕ9.52 (3/8") (Flare)	ϕ12.7 (1/2") (Flare)	ϕ15.88 (5/8") (Flare)
B	Liquid piping	ϕ6.35 (1/4") (Flare)		ϕ9.52 (3/8") (Flare)
C	Drain piping	VP25 (O.D. 32)		
D	Hole for wiring			
E	Suspension bolts	(M10)		
F	Outside air opening for ducting	(Knock out)		
G	Air outlet opening for ducting	(Knock out)		

Notes (1) The model name label is attached on the lid of the control box.

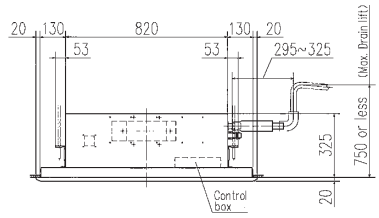

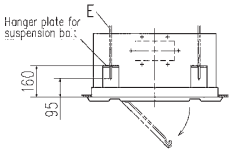

Space for installation and service

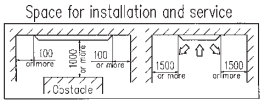

Make a space of 4000 or more between the units when installing more than one.

Decorative panel

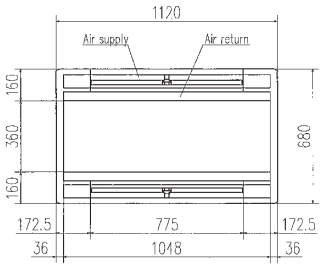

FDTW90KXE6F, 112KXE6F, 140KXE6F

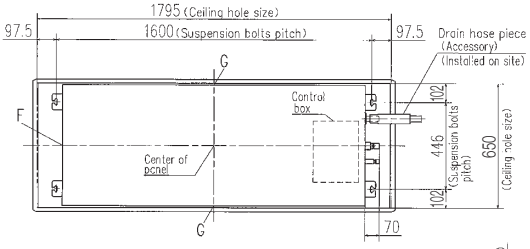

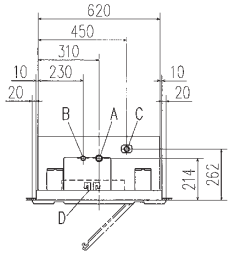

Symbol	Content	
A	Gas piping	ϕ15.88 (5/8") (Flare)
B	Liquid piping	ϕ9.52 (3/8") (Flare)
C	Drain piping	VP25 (O.D. 32)
D	Hole for wiring	
E	Suspension bolts	(M10)
F	Outside air opening for ducting	(Knock out)
G	Air outlet opening for ducting	(Knock out)

Notes (1) The model name label is attached on the lid of the control box.

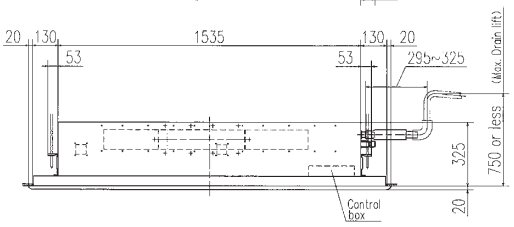

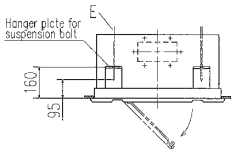

Space for installation and service

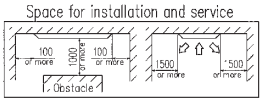

Make a space of 5000 or more between the units when installing more than one.

Decorative panel

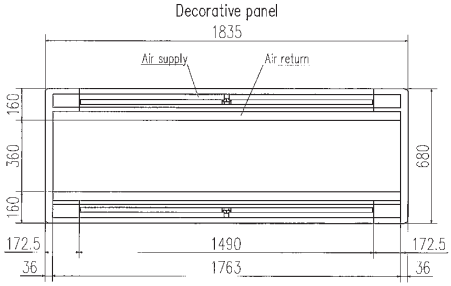

Ceiling Cassette -1way- FDTS

Model No.
FDTS45KXE6F
FDTS71KXE6F

Remote control (option)

Wired

RC-EX3A RC-E5 RCH-E3

Wireless

RCN-TS-E2

Individual flap control system

Two directions of air flow can be controlled individually by flap control system.

The flap can swing within the range of upper and lower flap position selected with wired remote control.

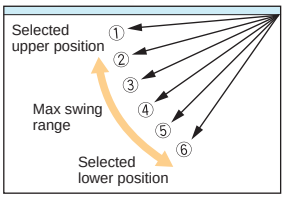

*The wireless remote control is not applicable to the individual flap control system.

Wireless remote control

For wireless remote control simply attach an additional panel with infrared receiver on the right side of the main decorative panel.

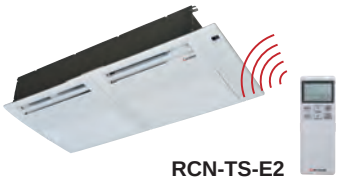

RCN-TS-E2

Compact design

Indoor unit size (W:1,150 x D:565) brings easy installation for 1,200 x 600 ceiling and Panel size (1,250 x 650) is suitable for 1,200 x 600 ceiling. Height is the industry's lowest height level 220mm and weight is only 27, 28kg.

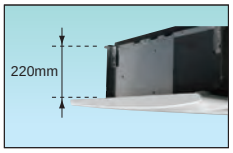

Motion Sensor (Option)

Motion sensor is equipped in the ceiling plane or wall plane and detects the presence/absence and activity of humans in a room to improve the comfort and energy saving performance of the unit.

LB-KIT2

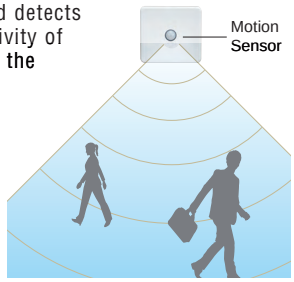

600mm Drain Pump

Drain can be discharged upward by 600mm from the ceiling surface close to the indoor unit.
It allows a piping layout with a high degree of freedom depending on the installation location.

Specifications

Item		Model	FDTS45KXE6F	FDTS71KXE6F
Nominal cooling capacity		kW	4.5	7.1
Nominal heating capacity		kW	5.0	8.0
Power source			1 Phase 220-240V, 50Hz	
Power consumption	Cooling	kW	0.04-0.04	0.09-0.09
	Heating		0.04-0.04	0.09-0.09
Sound power level		dB(A)	60	61
Sound pressure level		dB(A)	P-Hi:42 Hi:40 Me:38 Lo:35	P-Hi:49 Hi:46 Me:41 Lo:36
Exterior dimensions H x W x D		mm	Unit:220x1150x565 Panel:35x1250x650	
Net weight		kg	Unit:27 Panel:5	Unit:28 Panel:5
Air flow		m³/min	P-Hi:13 Hi:12 Me:11 Lo:9.5	P-Hi:17 Hi:15 Me:12 Lo:10
Outside air intake			Possible	
Panel			TS-PSA-3AW-E	
Air filter, Q'ty			Pocket Plastic net x2 (Washable)	
Remote control(option)			wired:RC-EX3A, RC-E5, RCH-E3 wireless:RCN-TS-E2	
Installation data Refrigerant piping size		mm(in)	Liquid line:ø6.35(1/4") Gas line:ø12.7(1/2")	Liquid line:ø9.52(3/8") Gas line:ø15.88(5/8")

1. The data are measured under the following conditions(ISO-T1). Cooling: Indoor temp. of 27ºCDB, 19ºCWB, and outdoor temp. of 35ºCDB. Heating: Indoor temp. of 20ºCDB, and outdoor temp. of 7ºCDB, 6ºCWB.
2. Sound pressure level indicates the value in an anechoic chamber. During operation these values are somewhat higher due to ambient conditions.

Dimensions

All measurements in mm.

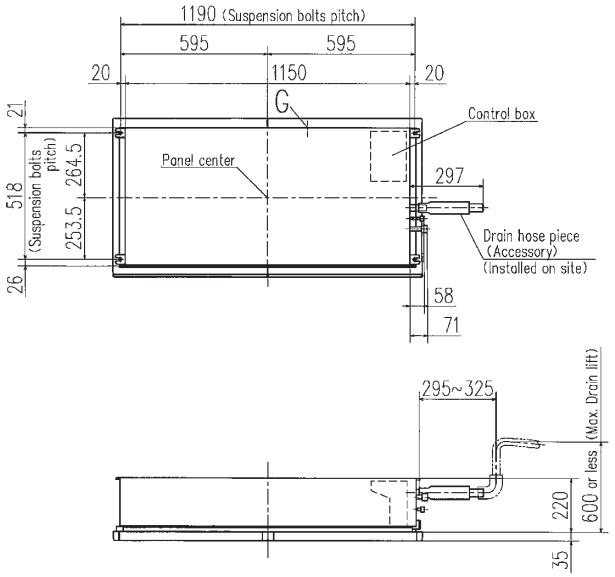

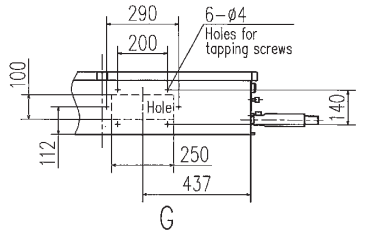

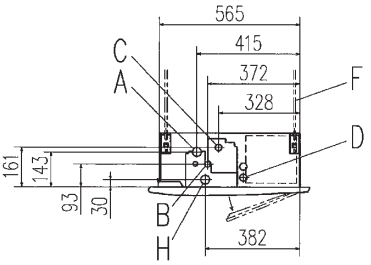

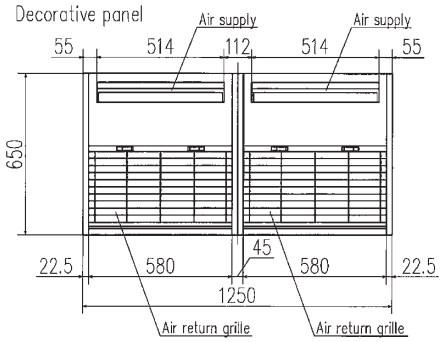

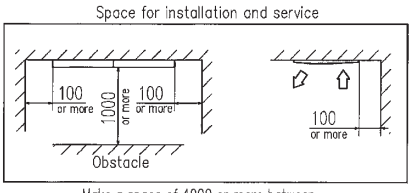

Make a space of 4000 or more between the units when installing more than one.

Symbol	Content		
	Model	45	71
A	Gas piping	φ12.7 (1/2") (Flare)	φ15.88 (5/8") (Flare)
B	Liquid piping	φ6.35 (1/4") (Flare)	φ9.52 (3/8") (Flare)
C	Drain piping	VP25 (O.D.32)	
D	Hole for wiring		
F	Suspension bolts	(M10)	
G	Outside air opening for ducting	(Knock out)	
H	Drain piping (Gravity drainage)	VP25 (I.D.25 , O.D.32)	

Ceiling Cassette -1way Compact- FDTQ

Model No.
FDTQ22KXE6F
FDTQ28KXE6F
FDTQ36KXE6F

Fits into standard 600 x 600 ceiling

Remote control (option)

Wired

RC-EX3A RC-E5 RCH-E3

Wireless

RCN-KIT4-E2

Compact design

- **Comfortable effective cooling for small rooms, with low fan speed air flow at just 5.4m³/min.**

Optional wide panel shown for solid ceiling

Motion Sensor NEW (Option)

Motion sensor is equipped in the ceiling plane or wall plane and detects the presence/absence and activity of humans in a room to improve the comfort and energy saving performance of the unit.

LB-KIT2

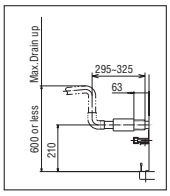

Condensate drain pump included as standard

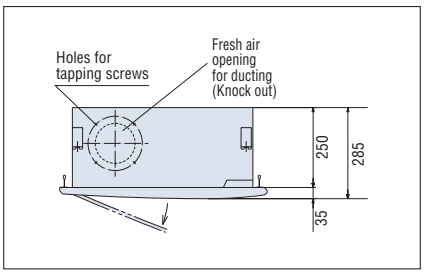

Ultra slim design at just 250mm above the ceiling

Specifications

Item		Model	FDTQ22KXE6F				FDTQ28KXE6F				FDTQ36KXE6F			
Panel Name			Direct blow panel		Duct panel		Direct blow panel		Duct panel		Direct blow panel		Duct panel	
Panel mode (Option)			TQ-PSA-15W-E	TQ-PSB-15W-E	QR-PNA-14W-ER	QR-PNB-14W-ER	TQ-PSA-15W-E	TQ-PSB-15W-E	QR-PNA-14W-ER	QR-PNB-14W-ER	TQ-PSA-15W-E	TQ-PSB-15W-E	QR-PNA-14W-ER	QR-PNB-14W-ER
Nominal cooling capacity		kW	2.2				2.8				3.6			
Nominal heating capacity		kW	2.5				3.2				4.0			
Power source			1 Phase 220-240V, 50Hz											
Power consumption	Cooling	kW	0.05-0.07				0.05-0.07				0.05-0.07			
	Heating		0.05-0.07				0.05-0.07				0.05-0.07			
Sound power level		dB(A)	60											
Sound pressure level		dB(A)	P-Hi:45Hi:41 Me:38 Lo:33				P-Hi:45 Hi:41 Me:38 Lo:33				P-Hi:45 Hi:41 Me:38 Lo:33			
Exterior dimensions H x W x D	Unit	mm	250x570x570				250x570x570				250x570x570			
	Panel		35x625x650	35x780x650	35x625x650	35x780x650	35x625x650	35x780x650	35x625x650	35x780x650	35x625x650	35x780x650	35x625x650	35x780x650
Net weight		kg	Unit:19 Panel:2.5	Unit:19 Panel:3	Unit:19 Panel:2.5	Unit:19 Panel:3	Unit:19 Panel:2.5	Unit:19 Panel:3	Unit:19 Panel:2.5	Unit:19 Panel:3	Unit:19 Panel:2.5	Unit:19 Panel:3	Unit:19 Panel:2.5	Unit:19 Panel:3
Air flow		m³/min	P-Hi:8 Hi:7 Me:6 Lo:5				P-Hi:8 Hi:7 Me:6 Lo:5				P-Hi:8 Hi:7 Me:6 Lo:5			
Outside air intake			Possible											
Air filter, Q'ty			Pocket Plastic net x1 (Washable)											
Remote control(option)			wired:RC-EX3A, RC-E5, RCH-E3 wireless:RCN-KIT4-E2											
Installation data Refrigerant piping size		mm(in)	Liquid line:ø6.35(1/4") Gas line:ø9.52(3/8")								Liquid line:ø6.35(1/4") Gas line:ø12.7(1/2")			

1. The data are based on the following conditions(ISO-T1). Cooling: Indoor temp. of 27ºCDB, 19ºCWB, and outdoor temp. of 35ºCDB. Heating: Indoor temp. of 20ºCDB, and outdoor temp. of 7ºCDB, 6ºCWB.
2. Sound pressure level indicates the value in an anechoic chamber. During operation these values are somewhat higher due to ambient conditions.

Dimensions

All measurements in mm.

Direct blow panel (TQ-PSA-15W-E)

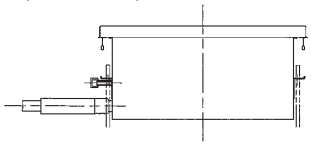

Direct blow panel (TQ-PSB-15W-E)

Symbol	Content		
	Model	FDTQ22KXE6F, 28KXE6F	FDTQ36KXE6F
A	Gas piping	ϕ9.52 (3/8") (Flare)	ϕ12.7 (1/2") (Flare)
B	Liquid piping	ϕ6.35 (1/4") (Flare)	
C	Drain piping	VP 25 (O.D.32)	
D	Hole for wiring	ϕ30	
E	Suspension bolts	M10	
F1,2	Outside air opening for ducting	(Knock out)	

Notes

(1) The model name label is attached on the fan case inside the air return grille.

(2) This unit is designed for 2X2 grid ceiling.

★ In case of Direct blow panel

Duct panel (QR-PNA-14W-ER)

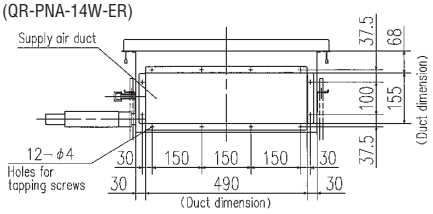

Duct panel (QR-PNB-14W-ER)

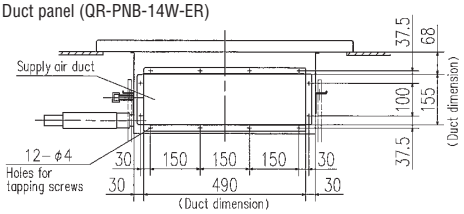

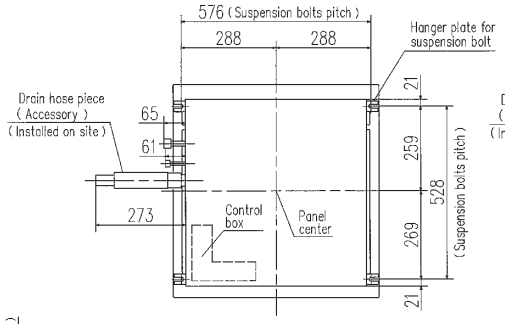

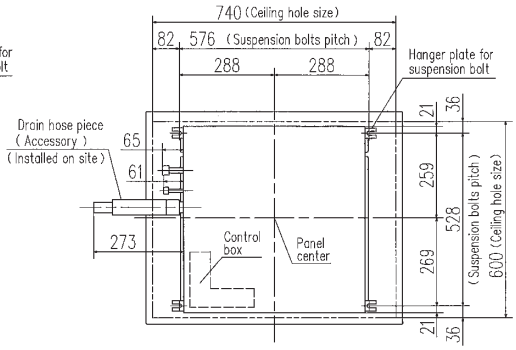

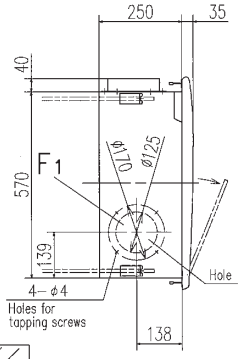

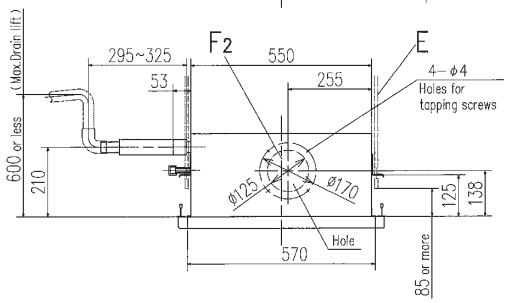

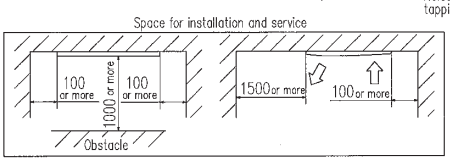

Make a space of 3000 or more between the units when installing more than one.

Decorative panel

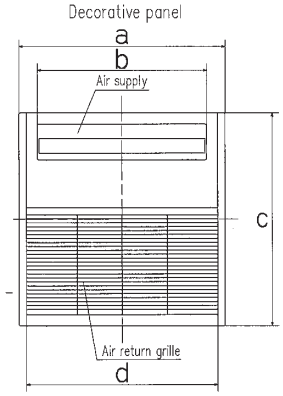

Decorative panel

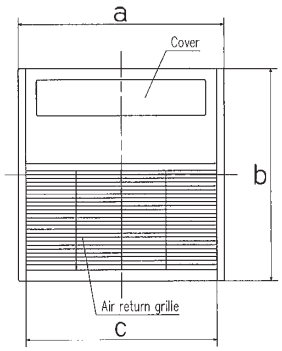

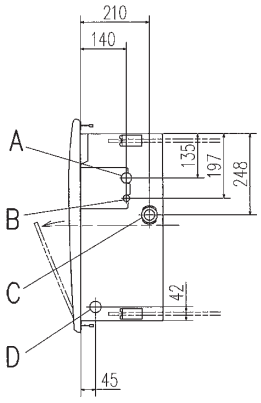

Dimension Table

Unit:mm

model	a	b	c	d
TQ-PSA-15W-E	625	514	650	580
TQ-PSB-15W-E	780	514	650	580

Dimension Table

Unit:mm

model	a	b	c
QR-PNA-14W-ER	625	650	580
QR-PNB-14W-ER	780	650	580

Duct Connected -High Static Pressure- FDU

NEW

224・280

Model No.

FDU45KXE6F-W	FDU45KXE6F
FDU56KXE6F-W	FDU56KXE6F
FDU71KXE6F-W	FDU71KXE6F
FDU90KXE6F-W	FDU90KXE6F
FDU112KXE6F-W	FDU112KXE6F
FDU140KXE6F-W	FDU140KXE6F
FDU160KXE6F-W	FDU160KXE6F

Model No.

FDU224KXZE1
FDU280KXZE1

*R32 indoor unit are not compatible with R410A outdoor unit and vice versa.

Remote control (option)

Wired

RC-EX3A RC-E5 RCH-E3

Wireless

RCN-KIT4-E2

External Static Pressure(E.S.P) control

Manually set the E.S.P on the wired controller, and the indoor unit will control the fan speed to keep rated air flow volume at each fan speed setting. You can set a required E.S.P by your wired remote controller – calculated with the set air flow rate and the pressure loss of the duct.

E.S.P. button RC-E5

External Static Pressure (E.S.P.) can be set by E.S.P. button.

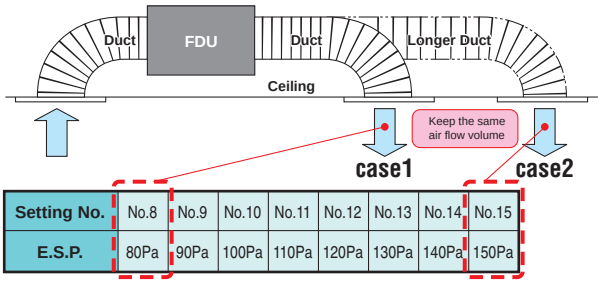

Setting No.	No.8	No.9	No.10	No.11	No.12	No.13	No.14	No.15
E.S.P.	80Pa	90Pa	100Pa	110Pa	120Pa	130Pa	140Pa	150Pa

*Range of 80~150 Pa is set at ex-factory default.
Range of 10~200 Pa is available by setting SW8-4 switch on at site.

Motion Sensor (Option)

Motion sensor is equipped in the ceiling plane or wall plane and detects the presence/absence and activity of humans in a room to improve the comfort and energy saving performance of the unit.

LB-KIT2

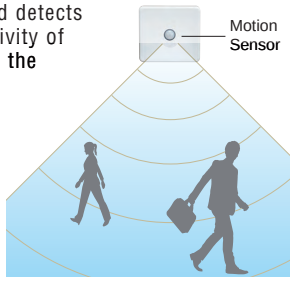

Thin design

The height of all FDU models only 280mm

Reduction of sound pressure level

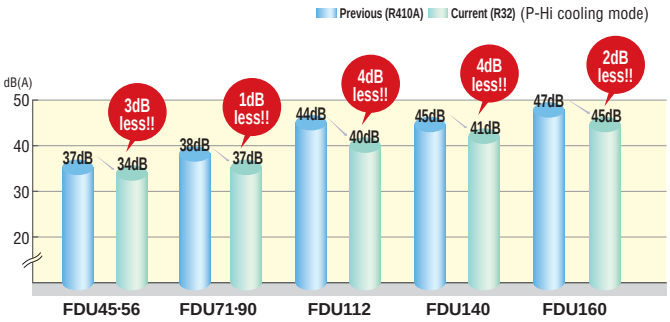

Transparent inspection window

Dirt condition of the bottom of the drain pan can be checked through this transparent inspection window without removing drain pan. (Please refer to P82)

Improvement of the serviceability

Fan unit (impeller and motor) can be pulled out from the right side of the unit. Maintenance can be carried out from the right side or the bottom side of the unit.

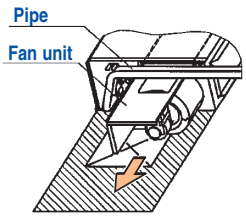

Round duct adapter

In case of requirements of round duct adapter, please refer to P95.

Company AIRZONE
URL http://www:airzone.es

Specifications

Item		Model	FDU45KXE6F-W	FDU56KXE6F-W	FDU71KXE6F-W	FDU90KXE6F-W	FDU112KXE6F-W	FDU140KXE6F-W	FDU160KXE6F-W
Nominal cooling capacity		kW	4.5	5.6	7.1	9.0	11.2	14.0	16.0
Nominal heating capacity		kW	5.0	6.3	8.0	10.0	12.5	16.0	18.0
Power source			1 Phase 220-240V, 50Hz						
Power consumption	Cooling	kW	0.10-0.10		0.24-0.25		0.31-0.32	0.35-0.36	0.42-0.43
	Heating		0.10-0.10		0.24-0.25		0.31-0.32	0.35-0.36	0.42-0.43
Sound power level		dB(A)	Cooling:58 Heating:60		Cooling:63 Heating:65		Cooling:68 Heating:69		72
Sound pressure level	Cooling	dB(A)	P-Hi:34 Hi:29 Me:27 Lo:25		P-Hi:37 Hi:31 Me:27 Lo:22		P-Hi:40 Hi:36 Me:34 Lo:28	P-Hi:41 Hi:37 Me:34 Lo:28	P-Hi:45 Hi:38 Me:34 Lo:29
	Heating		P-Hi:35 Hi:30 Me:29 Lo:25		P-Hi:39 Hi:33 Me:28 Lo:23		P-Hi:41 Hi:36 Me:34 Lo:28	P-Hi:41 Hi:37 Me:34 Lo:28	P-Hi:45 Hi:38 Me:34 Lo:29
Exterior dimensions (H x W x D)		mm	280x750x635		280x950x635		280x1368x740		
Net weight		kg	29		34		54		
Air flow		m^3/min	P-Hi:13 Hi:10 Me:9 Lo:8		P-Hi:24 Hi:19 Me:15 Lo:10		P-Hi:36 Hi:28 Me:25 Lo:19	P-Hi:39 Hi:32 Me:26 Lo:20	P-Hi:48 Hi:35 Me:28 Lo:22
Maximum external static pressure		Pa	200						
Outside air intake			Possible						
Air filter, Q'ty			Procure locally						
Remote control (option)			wired:RC-EX3A, RC-E5, RCH-E3 wireless:RCN-KIT4-E2						
Installation data Refrigerant piping size		mm(in)	Liquid line:ø6.35(1/4") Gas line:ø12.7(1/2")		Liquid line:ø9.52(3/8") Gas line:ø15.88(5/8")				

1. The data are measured under the following conditions(ISO-T1). Cooling: Indoor temp. of 27ºCDB, 19ºCWB, and outdoor temp. of 35ºCDB. Heating: Indoor temp. of 20ºCDB, and outdoor temp. of 7ºCDB, 6ºCWB.
2. Sound pressure level indicates the value in an anechoic chamber. During operation these values are somewhat higher due to ambient conditions.

Specifications

Item		Model	FDU45KXE6F	FDU56KXE6F	FDU71KXE6F	FDU90KXE6F	FDU112KXE6F	FDU140KXE6F	FDU160KXE6F
Nominal cooling capacity		kW	4.5	5.6	7.1	9.0	11.2	14.0	16.0
Nominal heating capacity		kW	5.0	6.3	8.0	10.0	12.5	16.0	18.0
Power source			1 Phase 220-240V, 50Hz						
Power consumption	Cooling	kW	0.10-0.10		0.24-0.25		0.31-0.32	0.35-0.36	0.42-0.43
	Heating		0.10-0.10		0.24-0.25		0.31-0.32	0.35-0.36	0.42-0.43
Sound power level		dB(A)	60		65		71	72	74
Sound pressure level		dB(A)	P-Hi:37 Hi:32 Me:29 Lo:26		P-Hi:38 Hi:33 Me:29 Lo:25		P-Hi:44 Hi:38 Me:36 Lo:30	P-Hi:45 Hi:40 Me:34 Lo:29	P-Hi:47 Hi:40 Me:35 Lo:30
Exterior dimensions (H x W x D)		mm	280x750x635		280x950x635		280x1368x740		
Net weight		kg	29		34		54		
Air flow		m^3/min	P-Hi:13 Hi:10 Me:9 Lo:8		P-Hi:24 Hi:19 Me:15 Lo:10		P-Hi:36 Hi:28 Me:25 Lo:19	P-Hi:39 Hi:32 Me:26 Lo:20	P-Hi:48 Hi:35 Me:28 Lo:22
Maximum external static pressure		Pa	200						
Outside air intake			Possible						
Air filter, Q'ty			Procure locally						
Remote control (option)			wired:RC-EX3A, RC-E5, RCH-E3 wireless:RCN-KIT4-E2						
Installation data Refrigerant piping size		mm(in)	Liquid line:ø6.35(1/4") Gas line:ø12.7(1/2")		Liquid line:ø9.52(3/8") Gas line:ø15.88(5/8")				

Item		Model	FDU224KXZE1	FDU280KXZE1
Nominal cooling capacity		kW	22.4	28.0
Nominal heating capacity		kW	25.0	31.5
Power source			1 Phase 220-240V, 50Hz	
Power consumption	Cooling	kW	1.16-1.20	1.16-1.20
	Heating		1.16-1.20	1.16-1.20
Sound power level		dB(A)	75	
Sound pressure level		dB(A)	P-Hi:52 Hi:50 Me:47 Lo:45	
Exterior dimensions (H x W x D)		mm	379x1600x893	
Net weight		kg	89	
Air flow		m^3/min	P-Hi:80 Hi:72 Me:64 Lo:56	
Maximum external static pressure		Pa	200	
Outside air intake			Possible(on return duct)	
Air filter, Q'ty			Procure locally	
Remote control (option)			wired:RC-EX3A, RC-E5, RCH-E3 wireless:RCN-KIT4-E2	
Installation data Refrigerant piping size		mm(in)	Liquid line:ø9.52(3/8") Gas line:ø19.05(3/4")	Liquid line:ø9.52(3/8") Gas line:ø22.22(7/8")

1. The data are measured under the following conditions(ISO-T1). Cooling: Indoor temp. of 27ºCDB, 19ºCWB, and outdoor temp. of 35ºCDB. Heating: Indoor temp. of 20ºCDB, and outdoor temp. of 7ºCDB, 6ºCWB.
2. Sound pressure level indicates the value in an anechoic chamber. During operation these values are somewhat higher due to ambient conditions.

Dimensions

All measurements in mm.

FDU45KXE6F-W, 56KXE6F-W
FDU45KXE6F, 56KXE6F

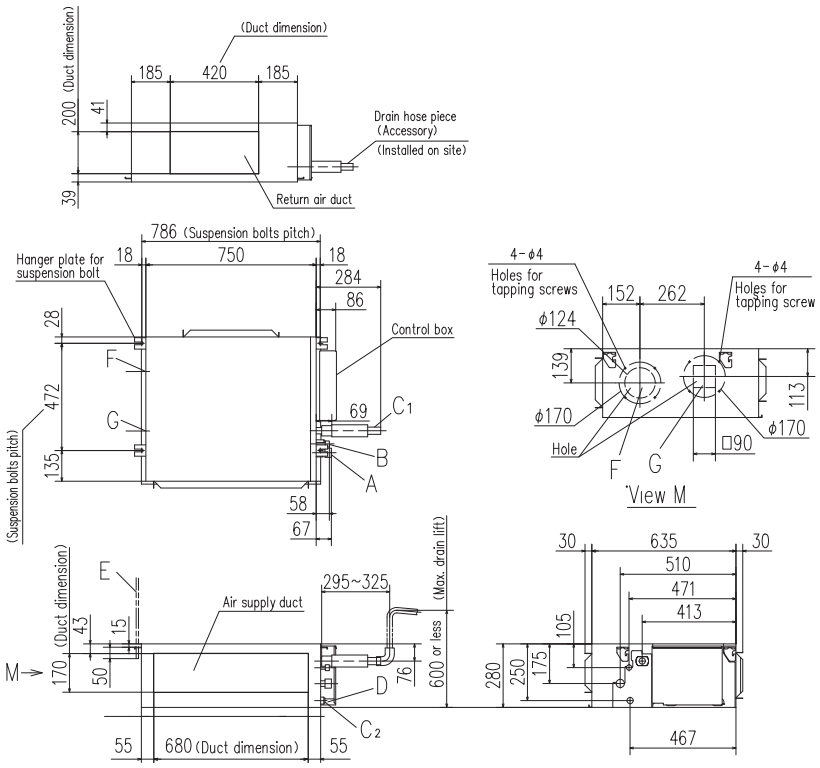

Symbol	Content	
A	Gas piping	φ12.7 (1/2") (Flare)
B	Liquid piping	φ6.35 (1/4") (Flare)
C1	Drain piping	VP25 (O.D.32)
C2	Drain piping (Gravity drainage)	VP20
D	Hole for wiring	
E	Suspension bolts	M10
F	Outside air opening for ducting	(Knock out)
G	Air outlet opening for ducting	(Knock out)
H	Inspection opening	(450X450)

Space for installation and service

Select either of two cases to keep space for installation and services.

(Case 1) From side of unit

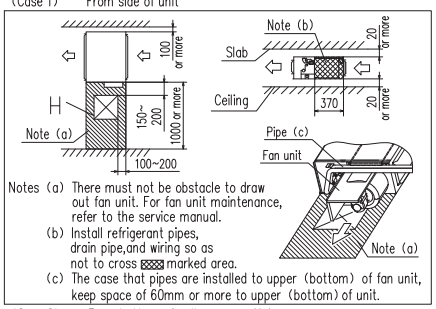

Notes (a) There must not be obstacle to draw out fan unit. For fan unit maintenance, refer to the service manual.

(b) Install refrigerant pipes, drain pipe,and wiring so as not to cross ▩ marked area.

(c) The case that pipes are installed to upper (bottom) of fan unit, keep space of 60mm or more to upper (bottom) of unit.

(Case 2) From bottom of unit

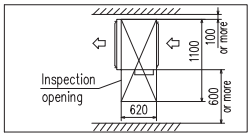

Note

(1) The model name label is attached on the lid of the control box.

FDU71KXE6F-W, 90KXE6F-W
FDU71KXE6F, 90KXE6F

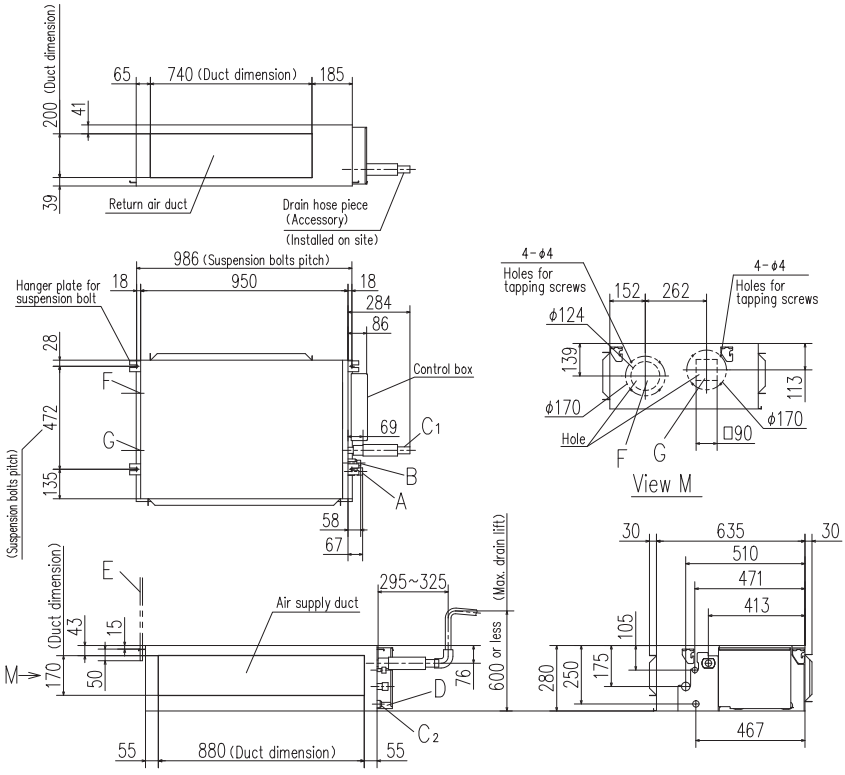

Symbol	Content	
A	Gas piping	φ15.88 (5/8") (Flare)
B	Liquid piping	φ9.52 (3/8") (Flare)
C1	Drain piping	VP25 (O.D.32)
C2	Drain piping (Gravity drainage)	VP20
D	Hole for wiring	
E	Suspension bolts	M10
F	Outside air opening for ducting	(Knock out)
G	Air outlet opening for ducting	(Knock out)
H	Inspection opening	(450X450)

Space for installation and service

Select either of two cases to keep space for installation and services.

(Case 1) From side of unit

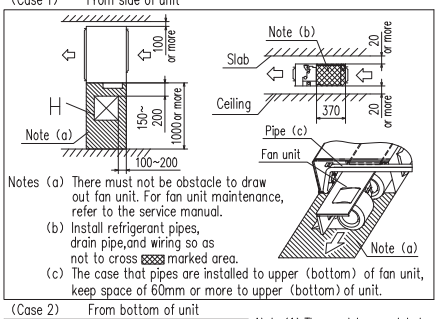

Notes (a) There must not be obstacle to draw out fan unit. For fan unit maintenance, refer to the service manual.

(b) Install refrigerant pipes, drain pipe,and wiring so as not to cross ▩ marked area.

(c) The case that pipes are installed to upper (bottom) of fan unit, keep space of 60mm or more to upper (bottom) of unit.

(Case 2) From bottom of unit

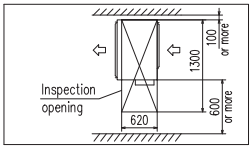

Note (1) The model name label is attached on the lid of the control box.

FDU112KXE6F-W, 140KXE6F-W, 160KXE6F-W
FDU112KXE6F, 140KXE6F, 160KXE6F

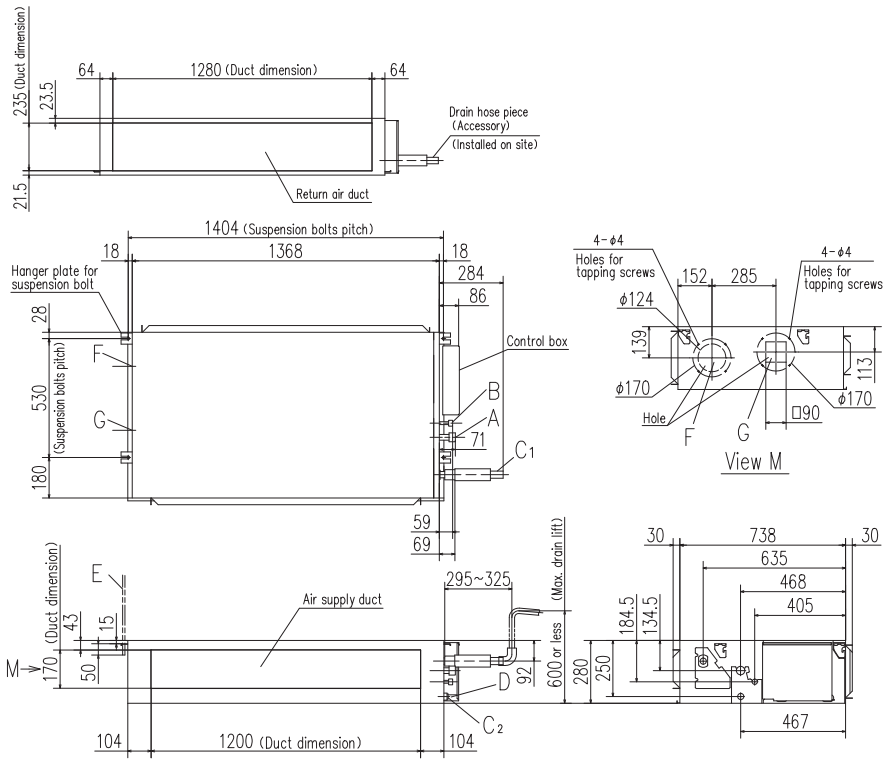

Symbol	Content	
A	Gas piping	φ15.88 (5/8") (Flare)
B	Liquid piping	φ9.52 (3/8") (Flare)
C1	Drain piping	VP25 (O.D.32)
C2	Drain piping (Gravity drainage)	VP20
D	Hole for wiring	
E	Suspension bolts	M10
F	Outside air opening for ducting	(Knock out)
G	Air outlet opening for ducting	(Knock out)
H	Inspection opening	(450X450)

Space for installation and service

Select either of two cases to keep space for installation and services.

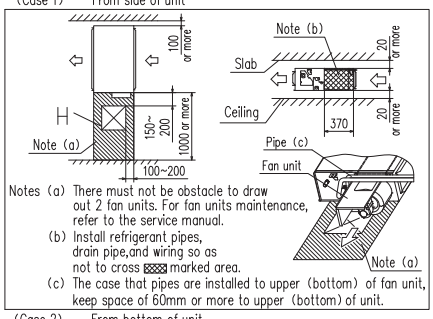

Notes (a) There must not be obstacle to draw out 2 fan units. For fan units maintenance, refer to the service manual.
(b) Install refrigerant pipes, drain pipe,and wiring so as not to cross ▩ marked area.
(c) The case that pipes are installed to upper (bottom) of fan unit, keep space of 60mm or more to upper (bottom) of unit.

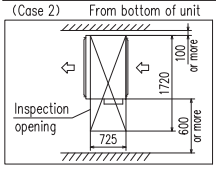

Note
(1) The model name label is attached on the lid of the control box.

FDU224KXZE1, 280KXZE1

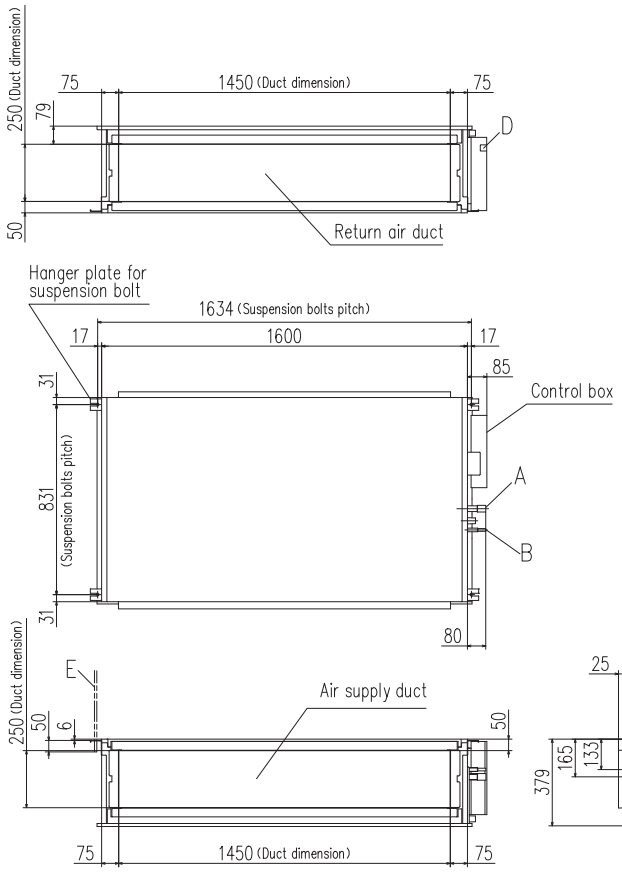

Symbol	Content		
	MODEL	224	280
A	Gas piping	φ19.05 (3/4") (Brazing)	φ22.22 (7/8") (Brazing)
B	Liquid piping	φ9.52 (3/8") (Brazing)	
C	Drain piping (Gravity drainage)	VP25 (O.D.32)	
D	Hole for wiring		
E	Suspension bolts	M10	
F	Inspection hole	(450X450)	

Space for installation and service

Select either of two cases to keep space for installation and services.

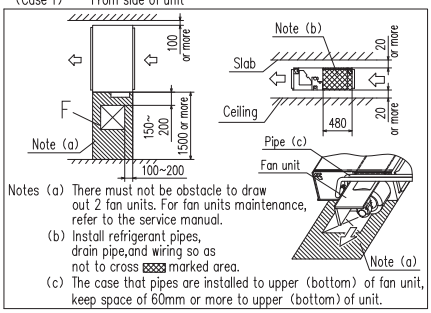

Notes (a) There must not be obstacle to draw out 2 fan units. For fan units maintenance, refer to the service manual.
(b) Install refrigerant pipes, drain pipe,and wiring so as not to cross ▩ marked area.
(c) The case that pipes are installed to upper (bottom) of fan unit, keep space of 60mm or more to upper (bottom) of unit.

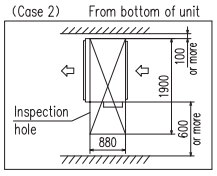

Notes (1) The model name label is attached on the lid of the control box.

Duct Connected -Low/Middle Static Pressure- FDUM

NEW

Model No.

FDUM22KXE6F-W	FDUM22KXE6F
FDUM28KXE6F-W	FDUM28KXE6F
FDUM36KXE6F-W	FDUM36KXE6F
FDUM45KXE6F-W	FDUM45KXE6F
FDUM56KXE6F-W	FDUM56KXE6F
FDUM71KXE6F-W	FDUM71KXE6F
FDUM90KXE6F-W	FDUM90KXE6F
FDUM112KXE6F-W	FDUM112KXE6F
FDUM140KXE6F-W	FDUM140KXE6F
FDUM160KXE6F-W	FDUM160KXE6F

Filter kit (option)

UM-FL1EF : for 22~56
UM-FL2EF : for 71, 90
UM-FL3EF : for 112, 140, 160

*Filter pressure loss:5pa

Remote control (option)

Wired

RC-EX3A **RC-E5** **RCH-E3**

Wireless

RCN-KIT4-E2

*R32 indoor unit are not compatible with R410A outdoor unit and vice versa.

Automatic external static pressure (E.S.P.) control

Using the automatic control, DC motor, the most optimum air flow volume is achieved. The Indoor unit will recognise external static pressure automatically and keep rated air flow volume.

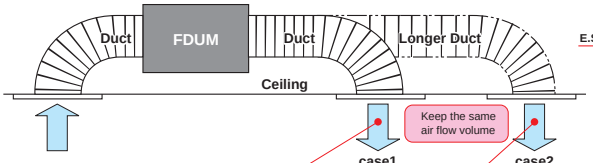

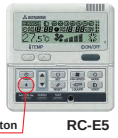

External static pressure (E.S.P.) can be set by E.S.P. button.

Setting No.	No.1	No.2	No.3	No.4	No.5	No.6	No.7	No.8	No.9	No.10
E.S.P.	10Pa	20Pa	30Pa	40Pa	50Pa	60Pa	70Pa	80Pa	90Pa	100Pa

Thin design

The height of all FDUM models only 280mm

Transparent inspection window

Dirt condition of the bottom of the drain pan can be checked through this transparent inspection window without removing drain pan. (Please refer to P82)

Motion Sensor (Option)

Motion sensor is equipped in the ceiling plane or wall plane and detects the presence/absence and activity of humans in a room to improve the comfort and energy saving performance of the unit.

LB-KIT2

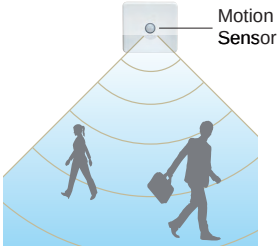

Improvement of the serviceability

Fan unit (impeller and motor) can be pulled out from the right side or the bottom side of the unit. Maintenance can be carried out from the right side or the bottom side of the unit.

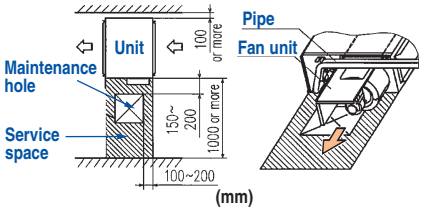

Specifications

Item		Model	FDUM22KXE6F-W	FDUM28KXE6F-W	FDUM36KXE6F-W	FDUM45KXE6F-W	FDUM56KXE6F-W
Nominal cooling capacity		kW	2.2	2.8	3.6	4.5	5.6
Nominal heating capacity		kW	2.5	3.2	4.0	5.0	6.3
Power source			1 Phase 220-240V, 50Hz				
Power consumption	Cooling	kW	0.08-0.08				
	Heating		0.08-0.08				
Sound power level		dB(A)	Cooling:57 Heating:60		Cooling:58 Heating:60		
Sound pressure level	Cooling	dB(A)	P-Hi:33 Hi:27 Me:25 Lo:23		P-Hi:34 Hi:29 Me:27 Lo:25		
	Heating		P-Hi:36 Hi:30 Me:29 Lo:25		P-Hi:35 Hi:30 Me:29 Lo:25		
Exterior dimensions (H x W x D)		mm	280 x 750 x 635				
Net weight		kg	29				
Air flow		m^3/min	P-Hi:13 Hi:10 Me:9 Lo:8				
Maximum external static pressure		Pa	100				
Outside air intake			Possible				
Air filter, Q'ty			Filter kit:UM-FL1EF				
Remote control (option)			wired:RC-EX3A, RC-E5, RCH-E3 wireless:RCN-KIT4-E2				
Installation data Refrigerant piping size		mm(in)	Liquid line:ø6.35(1/4") Gas line:ø9.52(3/8")		Liquid line:ø6.35(1/4") Gas line:ø12.7(1/2")		

Item		Model	FDUM71KXE6F-W	FDUM90KXE6F-W	FDUM112KXE6F-W	FDUM140KXE6F-W	FDUM160KXE6F-W
Nominal cooling capacity		kW	7.1	9.0	11.2	14.0	16.0
Nominal heating capacity		kW	8.0	10.0	12.5	16.0	18.0
Power source			1 Phase 220-240V, 50Hz				
Power consumption	Cooling	kW	0.16-0.16		0.25-0.25	0.26-0.26	0.38-0.38
	Heating		0.16-0.16		0.25-0.25	0.26-0.26	0.38-0.38
Sound power level		dB(A)	Cooling:63 Heating:65		Cooling:68 Heating:69		72
Sound pressure level	Cooling	dB(A)	P-Hi:37 Hi:31 Me:27 Lo:22		P-Hi:40 Hi:36 Me:34 Lo:28	P-Hi:41 Hi:37 Me:34 Lo:28	P-Hi:45 Hi:38 Me:34 Lo:29
	Heating		P-Hi:39 Hi:33 Me:28 Lo:23		P-Hi:41 Hi:36 Me:34 Lo:28		
Exterior dimensions (H x W x D)		mm	280 x 950 x 635		280 x 1368 x 740		
Net weight		kg	34		54		
Air flow		m^3/min	P-Hi:24 Hi:19 Me:15 Lo:10		P-Hi:36 Hi:28 Me:25 Lo:19	P-Hi:39 Hi:32 Me:26 Lo:20	P-Hi:48 Hi:35 Me:28 Lo:22
Maximum external static pressure		Pa	100				
Outside air intake			Possible				
Air filter, Q'ty			Filter kit:UM-FL2EF		Filter kit:UM-FL3EF		
Remote control (option)			wired:RC-EX3A, RC-E5, RCH-E3 wireless:RCN-KIT4-E2				
Installation data Refrigerant piping size		mm(in)	Liquid line:ø9.52(3/8") Gas line:ø15.88(5/8")				

1. The data are measured under the following conditions(ISO-T1). Cooling: Indoor temp. of 27ºCDB, 19ºCWB, and outdoor temp. of 35ºCDB. Heating: Indoor temp. of 20ºCDB, and outdoor temp. of 7ºCDB, 6ºCWB.
2. Sound pressure level indicates the value in an anechoic chamber. During operation these values are somewhat higher due to ambient conditions.

Specifications

R410A

Item		Model	FDUM22KXE6F	FDUM28KXE6F	FDUM36KXE6F	FDUM45KXE6F	FDUM56KXE6F
Nominal cooling capacity		kW	2.2	2.8	3.6	4.5	5.6
Nominal heating capacity		kW	2.5	3.2	4.0	5.0	6.3
Power source			1 Phase 220-240V, 50Hz				
Power consumption	Cooling	kW	0.10-0.10				
	Heating		0.10-0.10				
Sound power level		dB(A)	60				
Sound pressure level		dB(A)	P-Hi:37 Hi:32 Me:29 Lo:26				
Exterior dimensions (H x W x D)		mm	280 x 750 x 635				
Net weight		kg	29				
Air flow		m^3/min	P-Hi:13 Hi:10 Me:9 Lo:8				
Maximum external static pressure		Pa	100				
Outside air intake			Possible				
Air filter, Q'ty			Filter kit:UM-FL1EF				
Remote control (option)			wired:RC-EX3A, RC-E5, RCH-E3 wireless:RCN-KIT4-E2				
Installation data Refrigerant piping size		mm(in)	Liquid line:ø6.35(1/4") Gas line:ø9.52(3/8")		Liquid line:ø6.35(1/4") Gas line:ø12.7(1/2")		

Item		Model	FDUM71KXE6F	FDUM90KXE6F	FDUM112KXE6F	FDUM140KXE6F	FDUM160KXE6F
Nominal cooling capacity		kW	7.1	9.0	11.2	14.0	16.0
Nominal heating capacity		kW	8.0	10.0	12.5	16.0	18.0
Power source			1 Phase 220-240V, 50Hz				
Power consumption	Cooling	kW	0.20-0.20		0.29-0.29	0.33-0.33	0.45-0.45
	Heating		0.20-0.20		0.29-0.29	0.33-0.33	0.45-0.45
Sound power level		dB(A)	65		71	72	74
Sound pressure level		dB(A)	P-Hi:38 Hi:33 Me:29 Lo:25		P-Hi:44 Hi:38 Me:36 Lo:30	P-Hi:45 Hi:40 Me:34 Lo:29	P-Hi:47 Hi:40 Me:35 Lo:30
Exterior dimensions (H x W x D)		mm	280 x 950 x 635		280 x 1368 x 740		
Net weight		kg	34		54		
Air flow		m^3/min	P-Hi:24 Hi:19 Me:15 Lo:10		P-Hi:36 Hi:28 Me:25 Lo:19	P-Hi:39 Hi:32 Me:26 Lo:20	P-Hi:48 Hi:35 Me:28 Lo:22
Maximum external static pressure		Pa	100				
Outside air intake			Possible				
Air filter, Q'ty			Filter kit:UM-FL2EF		Filter kit:UM-FL3EF		
Remote control (option)			wired:RC-EX3A, RC-E5, RCH-E3 wireless:RCN-KIT4-E2				
Installation data Refrigerant piping size		mm(in)	Liquid line:ø9.52(3/8") Gas line:ø15.88(5/8")				

1. The data are measured under the following conditions(ISO-T1). Cooling: Indoor temp. of 27ºCDB, 19ºCWB, and outdoor temp. of 35ºCDB. Heating: Indoor temp. of 20ºCDB, and outdoor temp. of 7ºCDB, 6ºCWB.
2. Sound pressure level indicates the value in an anechoic chamber. During operation these values are somewhat higher due to ambient conditions.

Dimensions

All measurements in mm.

FDUM22KXE6F-W, 28KXE6F-W, 36KXE6F-W, 45KXE6F-W, 56KXE6F-W
FDUM22KXE6F, 28KXE6F, 36KXE6F, 45KXE6F, 56KXE6F

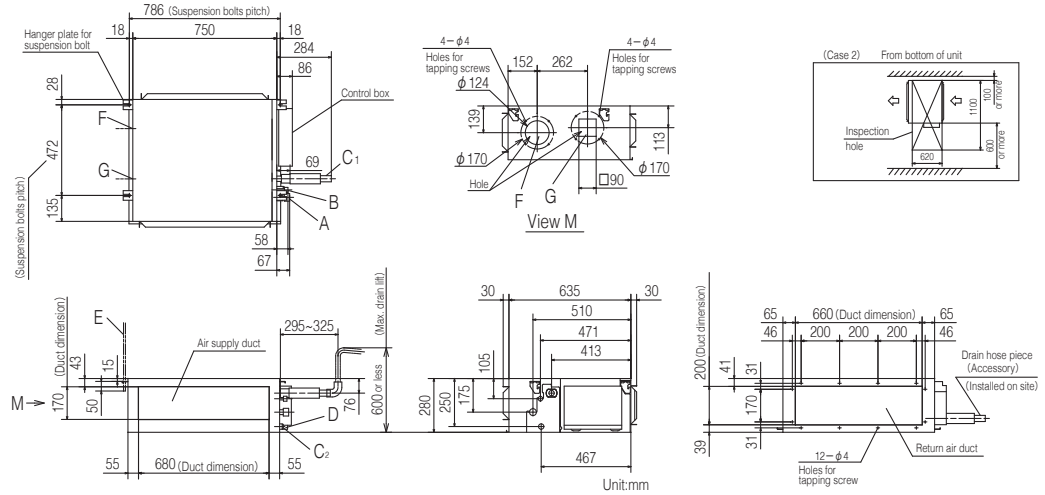

Space for installation and service

Select either of two cases to keep space for installation and services.

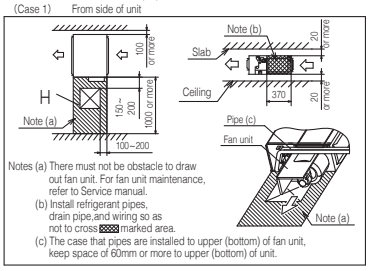

Notes (a) There must not be obstacle to draw out fan unit. For fan unit maintenance, refer to Service manual.
(b) Install refrigerant pipes, drain pipe,and wiring so as not to cross ▩ marked area.
(c) The case that pipes are installed to upper (bottom) of fan unit, keep space of 60mm or more to upper (bottom) of unit.

Symbol	Content		
	Model	22,28	36,45,56
A	Gas piping	φ9.52(3/8") (Flare)	φ12.7(1/2") (Flare)
B	Liquid piping	φ6.35(1/4") (Flare)	
C1	Drain piping	VP20(I.D.20,O.D.26) (Standard) or VP25(I.D.25,O.D.32) (Used with attached socket) Note(2)	
C2	Drain piping (Gravity drainage)	VP20(I.D.20,O.D.26) (Standard) or VP25(I.D.25,O.D.32) (Used with attached socket)	
D	Hole for wiring		
E	Suspension bolts	(M10)	
F	Outside air opening for ducting	(φ150) (Knock out)	
G	Air outlet opening for ducting	(φ125) (Knock out)	
H	Inspection hole	(450X450)	

Notes (1) The model name label is attached on the lid of the control box.
(2) Prepare the connecting socket (VP20 or VP25) on site.

FDUM71KXE6F-W, 90KXE6F-W
FDUM71KXE6F, 90KXE6F

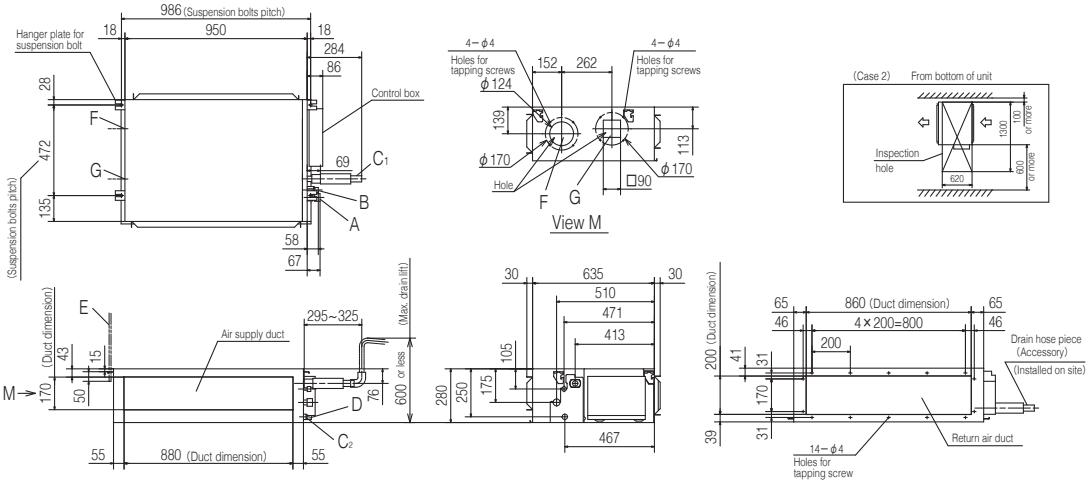

Space for installation and service

Select either of two cases to keep space for installation and services.

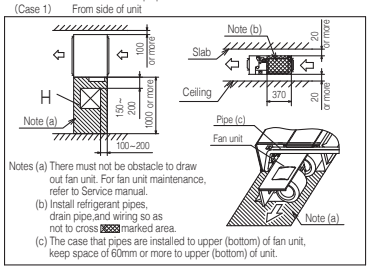

Notes (a) There must not be obstacle to draw out fan unit. For fan unit maintenance, refer to Service manual.
(b) Install refrigerant pipes, drain pipe,and wiring so as not to cross ▩ marked area.
(c) The case that pipes are installed to upper (bottom) of fan unit, keep space of 60mm or more to upper (bottom) of unit.

Symbol	Content	
A	Gas piping	φ15.88(5/8")(Flare)
B	Liquid piping	φ9.52(3/8")(Flare)
C1	Drain piping	VP20(I.D.20,O.D.26) (Standard) or VP25(I.D.25,O.D.32) (Used with attached socket) Note(2)
C2	Drain piping (Gravity drainage)	VP20(I.D.20,O.D.26) (Standard) or VP25(I.D.25,O.D.32) (Used with attached socket)
D	Hole for wiring	
E	Suspension bolts	(M10)
F	Outside air opening for ducting	(φ150)(Knock out)
G	Air outlet opening for ducting	(φ125)(Knock out)
H	Inspection hole	(450X450)

Notes(1) The model name label is attached on the lid of the control box.
(2) Prepare the connecting socket (VP20 or VP25) on site.

FDUM112KXE6F-W, 140KXE6F-W, 160KXE6F-W
FDUM112KXE6F, 140KXE6F, 160KXE6F

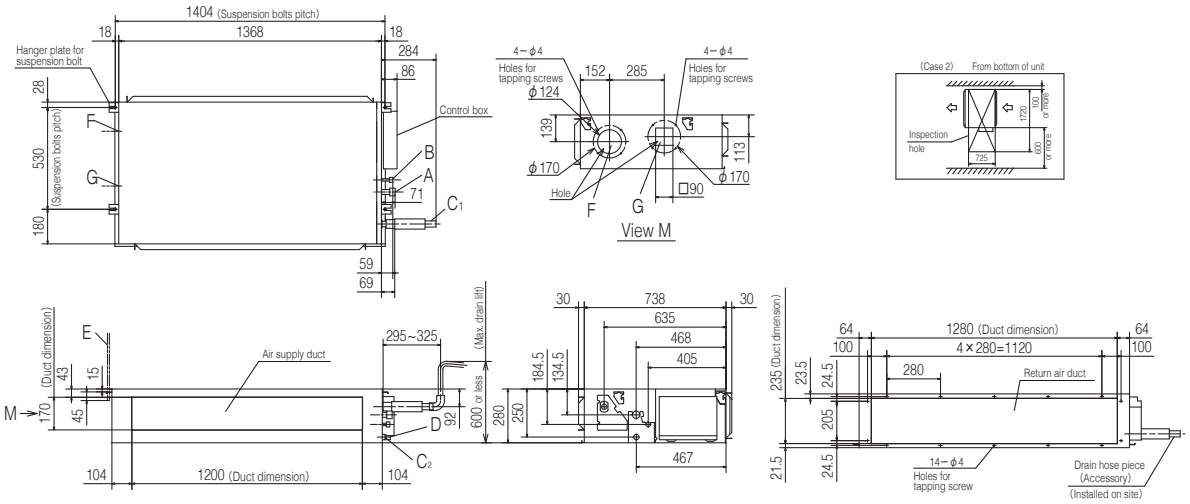

Space for installation and service

Select either of two cases to keep space for installation and services.

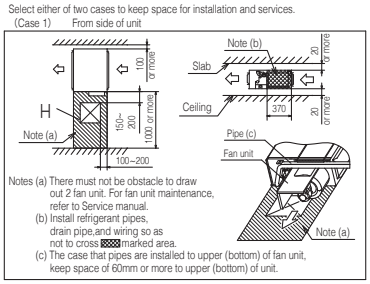

Notes (a) There must not be obstacle to draw out 2 fan unit. For fan unit maintenance, refer to Service manual.
(b) Install refrigerant pipes, drain pipe,and wiring so as not to cross ▩ marked area.
(c) The case that pipes are installed to upper (bottom) of fan unit, keep space of 60mm or more to upper (bottom) of unit.

Symbol	Content	
A	Gas piping	φ15.88 (5/8") (Flare)
B	Liquid piping	φ9.52 (3/8") (Flare)
C1	Drain piping	VP20 (I.D.20,O.D.26) (Standard) or VP25 (I.D.25,O.D.32) (Used with attached socket) Note (2)
C2	Drain piping (Gravity drainage)	VP20 (I.D.20,O.D.26) (Standard) or VP25 (I.D.25,O.D.32) (Used with attached socket)
D	Hole for wiring	
E	Suspension bolts	(M10)
F	Outside air opening for ducting	(φ150) (Knock out)
G	Air outlet opening for ducting	(φ125) (Knock out)
H	Inspection hole	(450X450)

Notes (1) The model name label is attached on the lid of the control box.
(2) Prepare the connecting socket (VP20 or VP25) on site.

Round duct adapter (Available for FDU 45~160, FDUM 22~160)

Company : AIRZONE
URL : http://www.airzone.es

All-in-one solution: the whole zoning system in a plug&play device perfectly adapted to the indoor DX unit

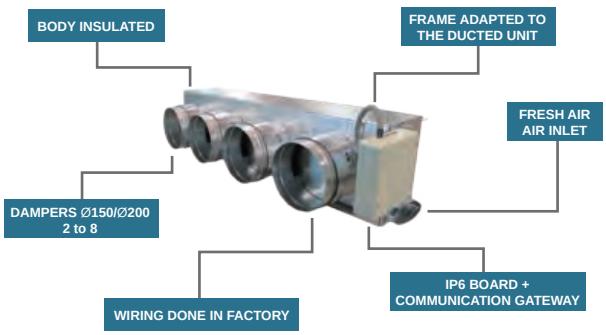

Main components

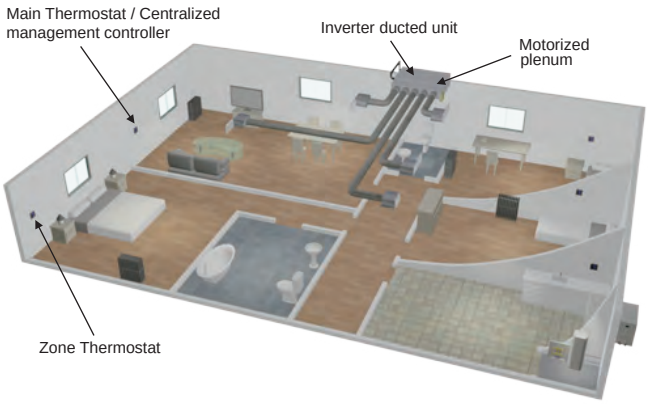

Duct Connected (thin) -Low Static Pressure- FDUT

Model No.

FDUT15KXE6F-W	FDUT15KXE6F-E
FDUT22KXE6F-W	FDUT22KXE6F-E
FDUT28KXE6F-W	FDUT28KXE6F-E
FDUT36KXE6F-W	FDUT36KXE6F-E
FDUT45KXE6F-W	FDUT45KXE6F-E
FDUT56KXE6F-W	FDUT56KXE6F-E
FDUT71KXE6F-W	FDUT71KXE6F-E

*R32 indoor unit are not compatible with R410A outdoor unit and vice versa.

NEW

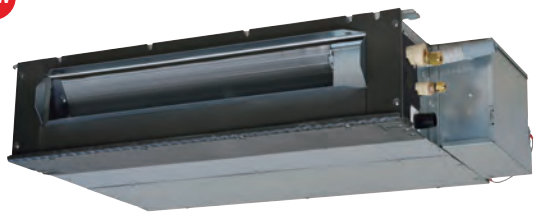

Remote control (option)

Wired

RC-EX3A RC-E5 RCH-E3

Wireless

RCN-KIT4-E2

Motion Sensor NEW (Option)

Motion sensor is equipped in the ceiling plane or wall plane and detects the presence/absence and activity of humans in a room to improve the comfort and energy saving performance of the unit.

LB-KIT2

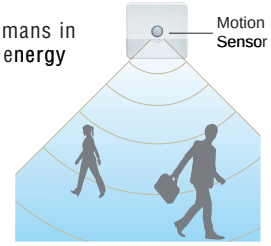

Duct kit and filter / Bottom air inlet kit (Option)

Item	Contents	for FDUT15/22/28/36	for FDUT45/56	for FDUT71
Outlet duct plate	①	UT-SAT1EF	UT-SAT2EF	UT-SAT3EF
Filter set	②+③	UT-FL1EF	UT-FL2EF	UT-FL3EF
Bottom air inlet kit	④+⑤	UT-BAT1EF	UT-BAT2EF	UT-BAT3EF

Filter pressure loss : 5 Pa

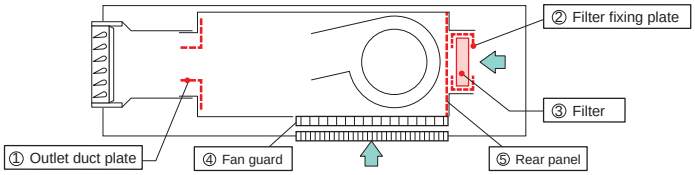

Specifications

Item		Model	FDUT15KXE6F-W	FDUT22KXE6F-W	FDUT28KXE6F-W	FDUT36KXE6F-W	FDUT45KXE6F-W	FDUT56KXE6F-W	FDUT71KXE6F-W
Nominal cooling capacity		kW	1.5	2.2	2.8	3.6	4.5	5.6	7.1
Nominal heating capacity		kW	1.7	2.5	3.2	4.0	5.0	6.0	8.0
Power source			1 Phase 220-240V, 50Hz						
Power consumption	Cooling	kW	0.057-0.058	0.063-0.066		0.067-0.070	0.075-0.078	0.076-0.080	0.08-0.08
	Heating		0.057-0.058	0.065-0.067		0.070-0.072	0.072-0.076	0.073-0.078	0.07-0.07
Sound power level		dB(A)	Cooling:52 Heating:51	52		Cooling:54 Heating:55	54	55	Cooling:56 Heating:57
Sound pressure level *1	Cooling	dB(A)	Hi:28 Me:26 Lo:21	Hi:28 Me:26 Lo:22		Hi:30 Me:28 Lo:24	Hi:30 Me:26 Lo:24	Hi:31 Me:27 Lo:24	Hi:32 Me:28 Lo:27
	Heating		Hi:28 Me:25 Lo:20			Hi:31 Me:29 Lo:25	Hi:30 Me:27 Lo:25	Hi:31 Me:28 Lo:26	Hi:32 Me:28 Lo:26
Sound pressure level *2		dB(A)	Hi:32 Me:29 Lo:25	Hi:32 Me:29 Lo:25		Hi:37 Me:34 Lo:28	Hi:36 Me:33 Lo:27	Hi:38 Me:33 Lo:29	Hi:41 Me:37 Lo:32
Exterior dimensions (H x W x D)		mm	200x750x500				200x950x500		220x1150x565
Net weight		kg	22	21		22	25		31
Air flow (Standard)		m^3/min	Hi:6 Me:5 Lo:4	Hi:7.5 Me:6 Lo:5		Hi:8.5 Me:7 Lo:5.5	Hi:11.5 Me:9 Lo:7	Hi:12.5 Me:9 Lo:7.2	Hi:16 Me:13 Lo:9.5
External Static pressure		Pa	Standard: 10 Max: 35				Standard: 10 Max: 50		
Outside air intake			Possible from return duct						
Air filter (option)			Filter set:UT-FL1EF				Filter set:UT-FL2EF		Filter set:UT-FL3EF
Remote control (option)			wired:RC-EX3A, RC-E5, RCH-E3 wireless:RCN-KIT4-E2						
Installation data Refrigerant piping size		mm(in)	Liquid line:ø6.35(1/4") Gas line:ø9.52(3/8")			Liquid line:ø6.35(1/4") Gas line:ø12.7(1/2")			Liquid line:ø9.52(3/8") Gas line:ø15.88(5/8")

Specifications

Item		Model	FDUT15KXE6F-E	FDUT22KXE6F-E	FDUT28KXE6F-E	FDUT36KXE6F-E	FDUT45KXE6F-E	FDUT56KXE6F-E	FDUT71KXE6F-E
Nominal cooling capacity		kW	1.5	2.2	2.8	3.6	4.5	5.6	7.1
Nominal heating capacity		kW	1.7	2.5	3.2	4.0	5.0	6.0	8.0
Power source			1 Phase 220-240V, 50Hz						
Power consumption	Cooling	kW	0.06-0.06	0.07-0.07			0.08-0.08		0.08-0.08
	Heating		0.06-0.06	0.07-0.07			0.08-0.08		0.07-0.07
Sound power level		dB(A)	52			57	58	59	
Sound pressure level *1		dB(A)	Hi:28 Me:26 Lo:22			Hi:33 Me:30 Lo:26	Hi:34 Me:32 Lo:28	Hi:35 Me:33 Lo:30	Hi:35 Me:31 Lo:28
Sound pressure level *2		dB(A)	Hi:32 Me:29 Lo:25			Hi:37 Me:34 Lo:28	Hi:36 Me:33 Lo:27	Hi:38 Me:33 Lo:29	Hi:41 Me:37 Lo:32
Exterior dimensions (H x W x D)		mm	200x750x500				200x950x500		220x1150x565
Net weight		kg	22	21		22	25		31
Air flow (Standard)		m^3/min	Hi:6 Me:5 Lo:4	Hi:7.5 Me:6 Lo:5		Hi:8.5 Me:7 Lo:5.5	Hi:11.5 Me:9 Lo:7	Hi:12.5 Me:9 Lo:7.2	Hi:16 Me:13 Lo:9.5
External Static pressure		Pa	Standard: 10 Max: 35				Standard: 10 Max: 50		
Outside air intake			Possible from return duct						
Air filter (option)			Filter set:UT-FL1EF				Filter set:UT-FL2EF		Filter set:UT-FL3EF
Remote control (option)			wired:RC-EX3A, RC-E5, RCH-E3 wireless:RCN-KIT4-E2						
Installation data Refrigerant piping size		mm(in)	Liquid line:ø6.35(1/4") Gas line:ø9.52(3/8")			Liquid line:ø6.35(1/4") Gas line:ø12.7(1/2")			Liquid line:ø9.52(3/8") Gas line:ø15.88(5/8")

1. The data are measured under the following conditions(ISO-T1). Cooling: Indoor temp. of 27ºCDB, 19ºCWB, and outdoor temp. of 35ºCDB. Heating: Indoor temp. of 20ºCDB, and outdoor temp. of 7ºCDB, 6ºCWB.
2. The data of nominal cooling and heating capacity and sound pressure level are measured with 10Pa of external static pressure.
3. The sound level indicates the value of rear-intake type with duct in anechoic chamber. During operation these values are somewhat higher due to ambient conditions.
4. Sound Pressure Level shows the value when the supply duct of 2m and the return duct of 1m (except the Bottom air return) are connected the unit.
Sound pressure level *1 : Mike position is 1.5m below the unit, *2 : Mike position is 1m in front and 1m below od the air supply duct.

Dimensions

All measurements in mm.

FDUT15KXE6F-W, 22KXE6F-W, 28KXE6F-W, 36KXE6F-W
FDUT15KXE6F-E, 22KXE6F-E, 28KXE6F-E, 36KXE6F-E

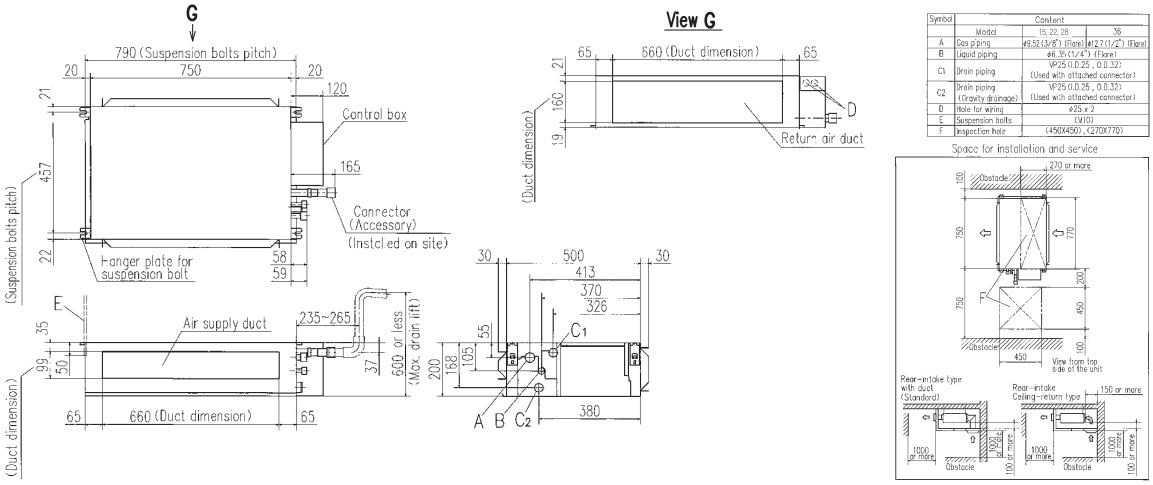

Symbol	Content		
	Model	15, 22, 28	36
A	Gas piping	ø9.52 (3/8") (Flare)	ø12.7 (1/2") (Flare)
B	Liquid piping	ø6.35 (1/4") (Flare)	
C1	Drain piping	VP25 (I.D.25 , O.D.32) (Used with attached connector)	
C2	Drain piping (Gravity drainage)	VP25 (I.D.25 , O.D.32) (Used with attached connector)	
D	Hole for wiring	ø25 x 2	
E	Suspension bolts	(M10)	
F	Inspection hole	(450X450) , (270X770)	

FDUT45KXE6F-W, 56KXE6F-W
FDUT45KXE6F-E, 56KXE6F-E

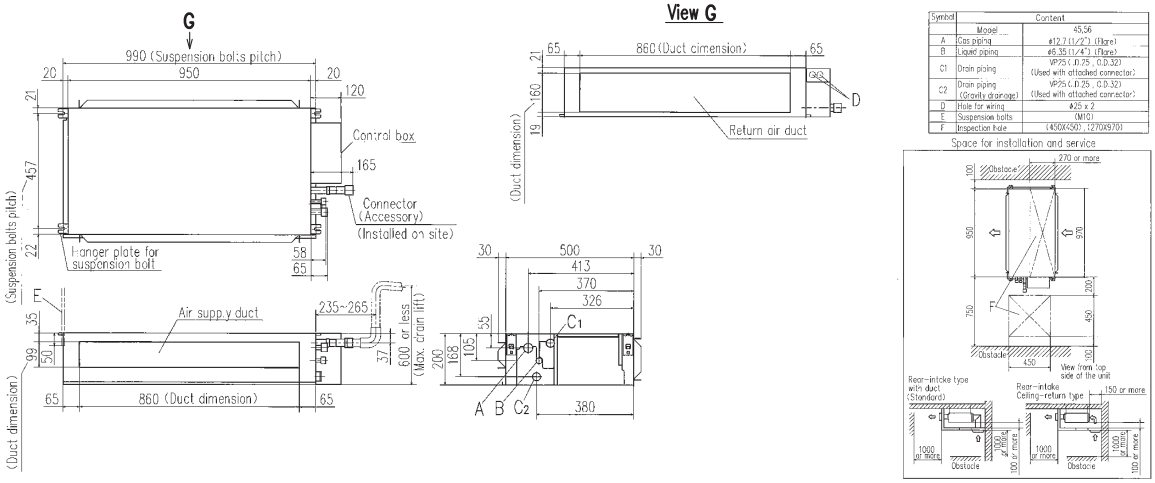

Symbol	Content	
	Model	45,56
A	Gas piping	ø12.7 (1/2") (Flare)
B	Liquid piping	ø6.35 (1/4") (Flare)
C1	Drain piping	VP25 (I.D.25 , O.D.32) (Used with attached connector)
C2	Drain piping (Gravity drainage)	VP25 (I.D.25 , O.D.32) (Used with attached connector)
D	Hole for wiring	ø25 x 2
E	Suspension bolts	(M10)
F	Inspection hole	(450X450) , (270X970)

FDUT71KXE6F-W
FDUT71KXE6F-E

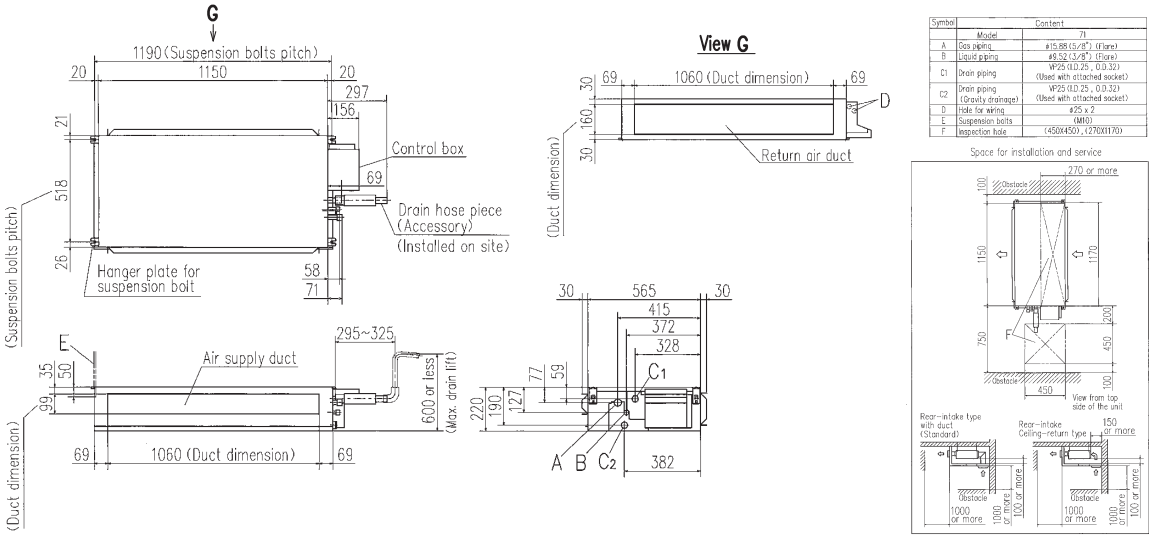

Symbol	Content	
	Model	71
A	Gas piping	ø15.88 (5/8") (Flare)
B	Liquid piping	ø9.52 (3/8") (Flare)
C1	Drain piping	VP25 (I.D.25 , O.D.32) (Used with attached socket)
C2	Drain piping (Gravity drainage)	VP25 (I.D.25 , O.D.32) (Used with attached socket)
D	Hole for wiring	ø25 x 2
E	Suspension bolts	(M10)
F	Inspection hole	(450X450) , (270X1170)

Duct Connected (Compact & Flexible) FDUH

Model No.
FDUH22KXE6F
FDUH28KXE6F
FDUH36KXE6F

Remote control (option)

Wired

RC-EX3A RC-E5 RCH-E3

Wireless

RCN-KIT4-E2

Filter kit (option)
UH-FL1E

*Filter pressure loss:5pa

Drain up kit (option)
(600mm)
UH-DU-E

Compact and thin size, light weight

Our leading high technology has created the best solution for air conditioning in hotels. The compact and thin sized units don't compromise on high energy efficiency all while weighing in at only 20kg.

The lowest sound level in the industry can ensure comfortable stay and rest in hotels.

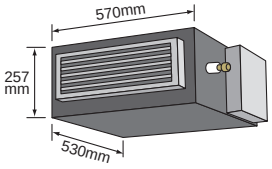

Motion Sensor NEW (Option)

Motion sensor is equipped in the ceiling plane or wall plane and detects the presence/absence and activity of humans in a room to improve the comfort and energy saving performance of the unit.

LB-KIT2

Installation Flexibility

Control box and drain piping can be installed on both side of the unit and air intake to the unit is available from bottom or back side. Our highest technology can satisfy diverse installation requirements.

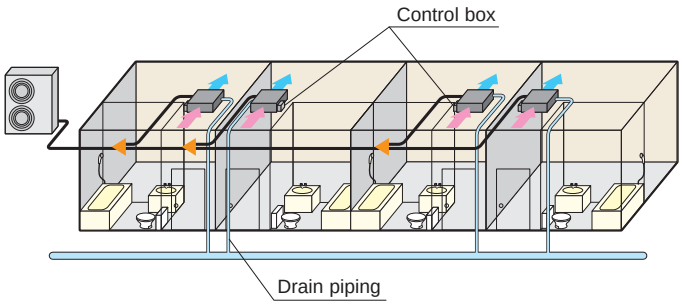

Wired remote control

RCH-E3 (option)

Simple remote control

Designed specially for hotel rooms, control buttons are limited only to the minimum required functions such as ON/OFF, mode, temperature setting and fan speed. It is really simple and easy to use.

Specifications

Item		Model	FDUH22KXE6F	FDUH28KXE6F	FDUH36KXE6F
Nominal cooling capacity		kW	2.2	2.8	3.6
Nominal heating capacity		kW	2.5	3.2	4.0
Power source			1 Phase 220-240V, 50Hz		
Power consumption	Cooling	kW	0.05-0.07		
	Heating		0.05-0.07		
Sound power level		dB(A)	60		
Sound pressure level		dB(A)	P-Hi:39 Hi: 33 Me: 30 Lo: 27		
Exterior dimensions HxWxD		mm	257x570x530		
Net weight		kg	20		
Air flow		m³/min	P-Hi:8.5 Hi: 7 Me: 6.5 Lo: 6		
External static pressure		Pa	30		
Outside air intake			Not possible		
Air filter			Filter kit:UH-FL1E(option)		
Remote control(option)			wired:RC-EX3A, RC-E5, RCH-E3 wireless:RCN-KIT4-E2		
Installation data Refrigerant piping size		mm(in)	Liquid line:ø6.35(1/4")		Liquid line:ø6.35(1/4")
			Gas line:ø9.52(3/8")		Gas line:ø12.7(1/2")

1. The data are measured under the following conditions(ISO-T1). Cooling: Indoor temp. of 27ºCDB, 19ºCWB, and outdoor temp. of 35ºCDB. Heating: Indoor temp. of 20ºCDB, and outdoor temp. of 7ºCDB, 6ºCWB.
2. Sound pressure level indicates the value in an anechoic chamber. During operation these values are somewhat higher due to ambient conditions.

Dimensions

All measurements in mm.

Rear air return type

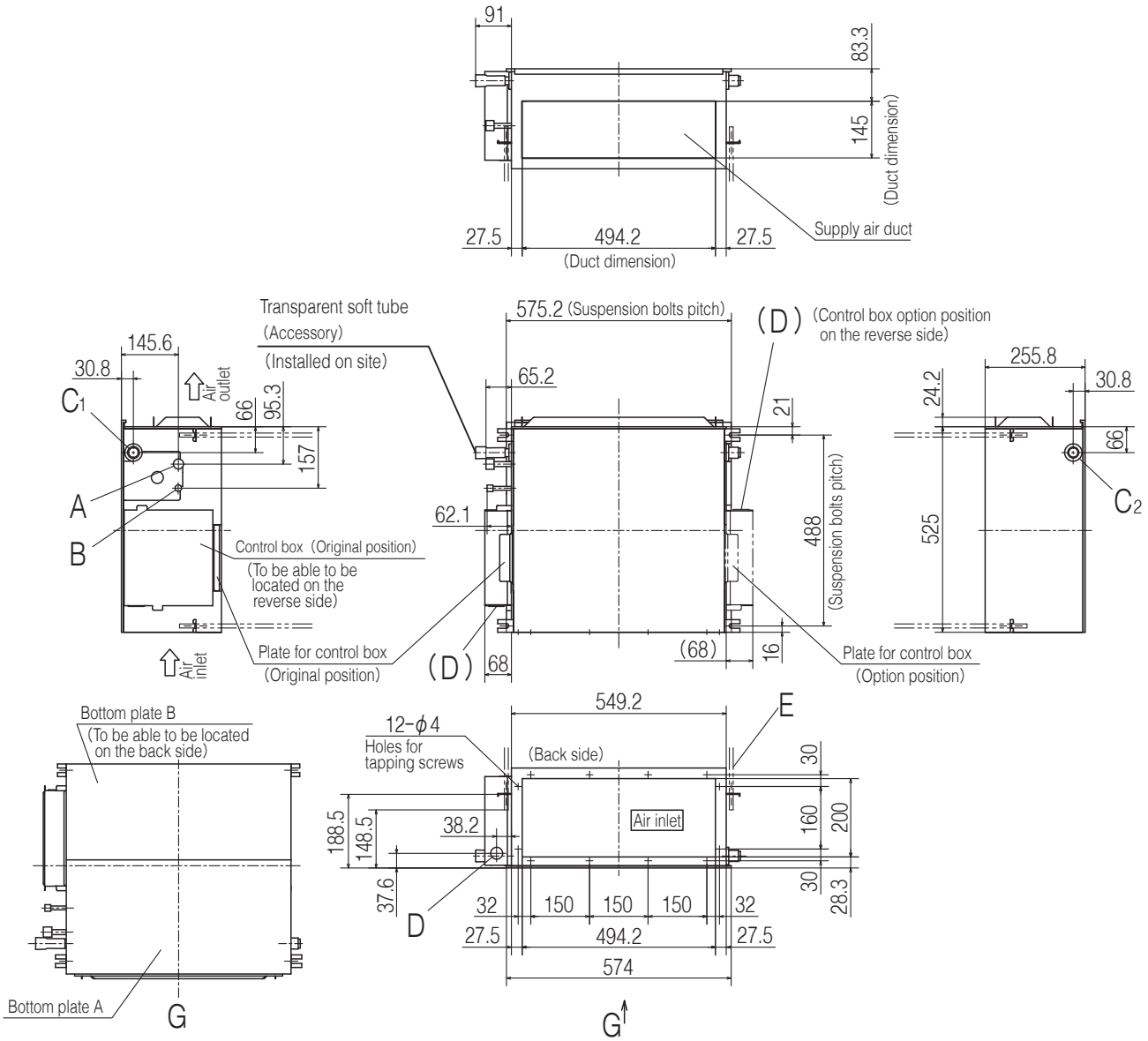

Symbol	Content		
	Model	22,28	36
A	Gas piping	ϕ9.52 (3/8") (Flare)	ϕ12.7 (1/2") (Flare)
B	Liquid piping	ϕ6.35 (1/4") (Flare)	
C_1	Drain piping	VP20 (I.D.20,O.D.26) Note (2)	
C_2	Drain piping	To be used instead of "C_1"	
D	Hole for wiring	ϕ30	
E	Suspension bolts	(M10)	
F	Inspection hole	(590 × 1150) Note (3)	

Notes

(1) The model name label is attached on the fan cose inside the air return grille.

(2) Prepare the connecting socket (VP20) on site. (As for drain piping, it is possible to choose C_1 or C_2)

(3) When control box is located on the reverse side, Installation space should be modified new location.

Space for installation and service

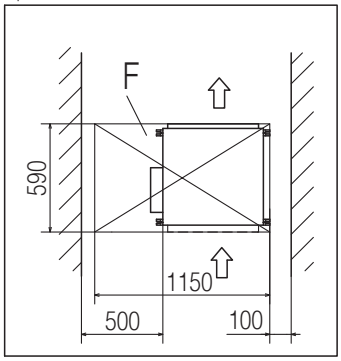

Dimensions

All measurements in mm.

Bottom suction type

Symbol	Content		
	Model	22,28	36
A	Gas piping	ϕ9.52 (3/8") (Flare)	ϕ12.7 (1/2") (Flare)
B	Liquid piping	ϕ6.35 (1/4") (Flare)	
C_1	Drain piping	VP20 (I.D.20,O.D.26) Note (2)	
C_2	Drain piping	To be used instead of "C_1"	
D	Hole for wiring	ϕ30	
E	Suspension bolts	(M10)	
F	Inspection hole	(555 x 1150) Note (3)	

Notes

(1) The model name label is attached on the fan cose inside the air return grille.
(2) Prepare the connecting socket (VP20) on site. (As for drain piping, it is possible to choose C_1 or C_2)
(3) When control box is located on the reverse side, Installation space should be modified new location.

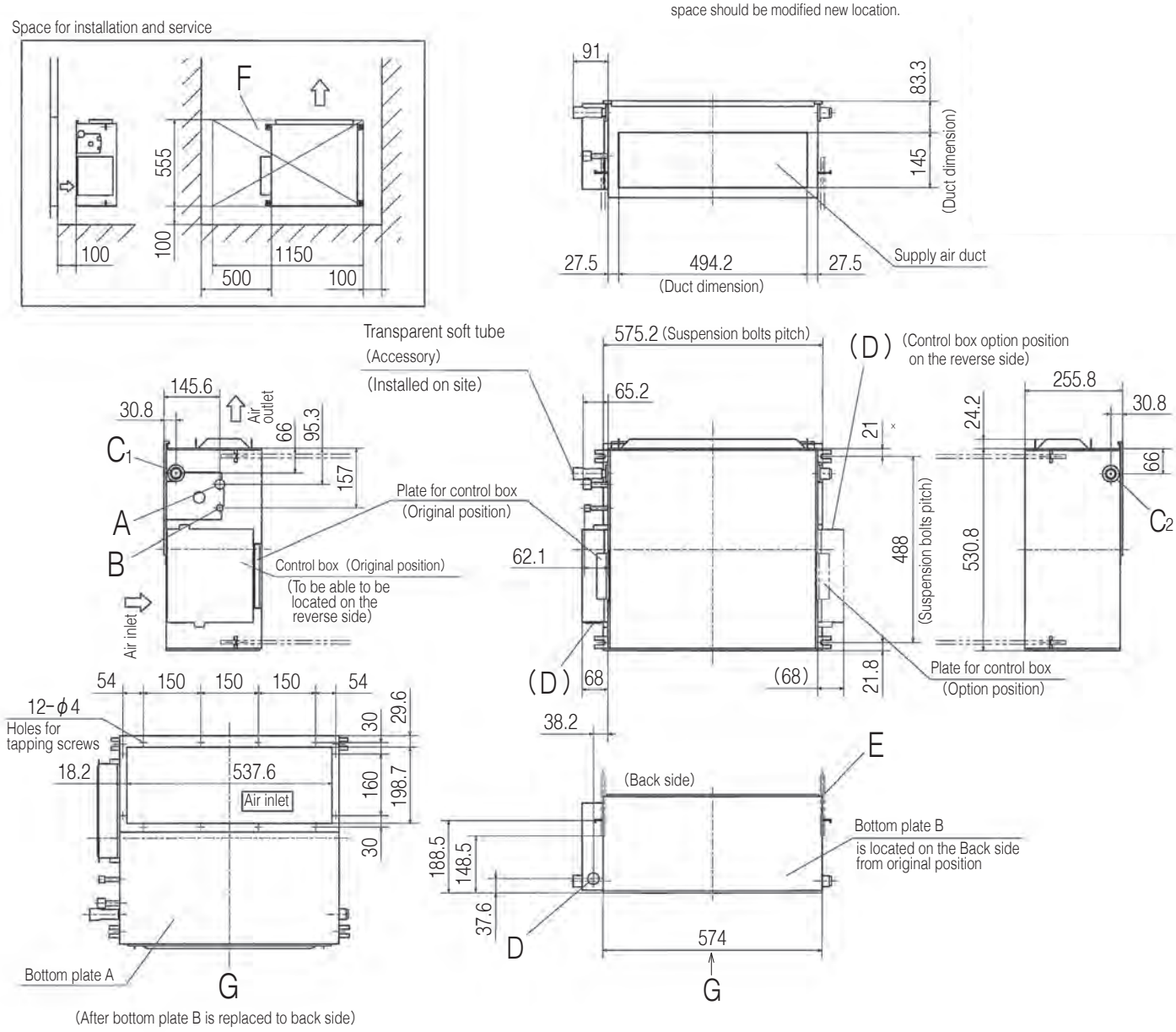

Wall Mounted
FDK

Model No.

FDK15KXZE1-W	FDK15KXZE1
FDK22KXZE1-W	FDK22KXZE1
FDK28KXZE1-W	FDK28KXZE1
FDK36KXZE1-W	FDK36KXZE1
FDK45KXZE1-W	FDK45KXZE1
FDK56KXZE1-W	FDK56KXZE1
FDK71KXZE1-W	FDK71KXZE1
FDK90KXZE1-W	FDK90KXZE1

*R32 indoor unit are not compatible with R410A outdoor unit and vice versa.

NEW

FDK15~56

FDK71,90

Remote control (option)

Wired

RC-EX3A RC-E5 RCH-E3

Wireless

RCN-K-E2: FDK15~56 RCN-K71-E2: FDK71,90

Elegant Timeless Design

The FDK series air conditioners are innovatively designed with rounded contours that beautifully fit into any of Europe's diverse interior settings. Created by an Italian industrial design studio based in Milan, Tensa srl, the design meets a broad range of requirements. (FDK15-56)

Jet Technology

FDK models adopt the air flow design that's proven to minimise resistance in a CFD analysis to achieve uniform air conditioning to the furthest corners of the room.

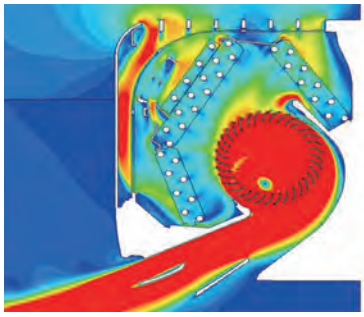

Fast ⟷ Slow
Colours in the figure show the air speed.

Flap control system

Selection of flap position is possible. A flap can be set at different angles.

*The wireless remote control is not applicable to the flap control system.

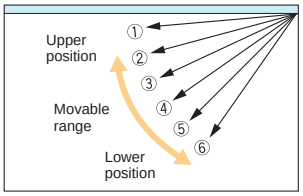

Lateral Swing ▶ flap swings from right to left automatically

Up/Down Flap swing + Lateral swing

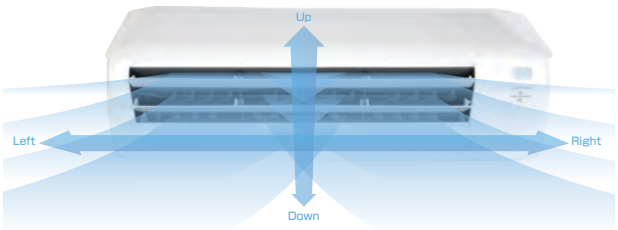

Motion Sensor (Option)

Motion sensor is equipped in the ceiling plane or wall plane and detects the presence/absence and activity of humans in a room to improve the comfort and energy saving performance of the unit.

LB-KIT2

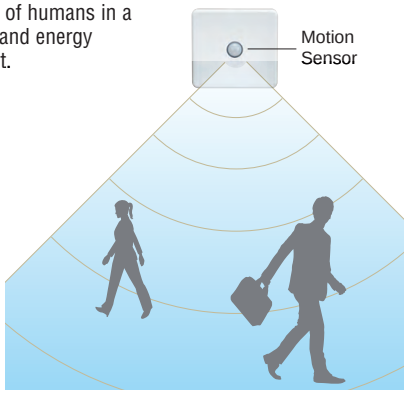

Specifications R32

Item		Model	FDK15KXZE1-W	FDK22KXZE1-W	FDK28KXZE1-W	FDK36KXZE1-W	FDK45KXZE1-W	FDK56KXZE1-W	FDK71KXZE1-W	FDK90KXZE1-W
Nominal cooling capacity		kW	1.5	2.2	2.8	3.6	4.5	5.6	7.1	9.0
Nominal heating capacity		kW	1.7	2.5	3.2	4.0	5.0	6.3	8.0	10.0
Power source			1 Phase 220-240V, 50Hz							
Power consumption	Cooling	kW	0.02-0.02			0.03-0.03			0.04-0.04	0.05-0.05
	Heating		0.02-0.02			0.03-0.03			0.04-0.04	0.05-0.05
Sound power level		dB(A)	54	55		58		Cooling:58 Heating:61	59	61
Sound pressure level	Cooling	dB(A)	P-Hi:38 Hi:34 Me:31 Lo:28	P-Hi:38 Hi:36 Me:30 Lo:27		P-Hi:40 Hi:38 Me:33 Lo:28	P-Hi:43 Hi:41 Me:36 Lo:33	P-Hi:43 Hi:41 Me:36 Lo:33	P-Hi:42 Hi:40 Me:37 Lo:35	P-Hi:44 Hi:42 Me:39 Lo:35
	Heating							P-Hi:44 Hi:42 Me:37 Lo:33		
Exterior dimensions H x W x D		mm	290 x 870 x 230						339 x 1197 x 262	
Net weight		kg	11.5	11		11.5			17	
Air flow	Cooling	m³/min	P-Hi:5.7 Hi:5 Me:4.5 Lo:3.6	P-Hi:8.5 Hi:8 Me:6 Lo:5		P-Hi:11 Hi:10 Me:8 Lo:7	P-Hi:12 Hi:11 Me:9 Lo:8	P-Hi:12 Hi:11 Me:9 Lo:8	P-Hi:21 Hi:19 Me:16 Lo:14	P-Hi:23 Hi:21 Me:19 Lo:16
	Heating							P-Hi:13 Hi:12 Me:10 Lo:8		
Outside air intake			Not possible							
Air filter, Q'ty			Polypropylene net x2 (Washable)							
Remote control(option)			wired:RC-EX3A, RC-E5, RCH-E3 wireless:RCN-K-E2						wired:RC-EX3A, RC-E5, RCH-E3 wireless:RCN-K71-E2	
Installation data Refrigerant piping size		mm(in)	Liquid line:ø6.35(1/4") Gas line:ø9.52(3/8")			Liquid line:ø6.35(1/4") Gas line:ø12.7(1/2")			Liquid line:ø9.52(3/8") Gas line:ø15.88(5/8")	

1. The data are measured under the following conditions(ISO-T1). Cooling: Indoor temp. of 27ºCDB, 19ºCWB, and outdoor temp. of 35ºCDB. Heating: Indoor temp. of 20ºCDB, and outdoor temp. of 7ºCDB, 6ºCWB.
2. Sound pressure level indicates the value in an anechoic chamber. During operation these values are somewhat higher due to ambient conditions.

Specifications R410A

Item		Model	FDK15KXZE1	FDK22KXZE1	FDK28KXZE1	FDK36KXZE1	FDK45KXZE1	FDK56KXZE1	FDK71KXZE1	FDK90KXZE1
Nominal cooling capacity		kW	1.5	2.2	2.8	3.6	4.5	5.6	7.1	9.0
Nominal heating capacity		kW	1.7	2.5	3.2	4.0	5.0	6.3	8.0	10.0
Power source			1 Phase 220-240V, 50Hz							
Power consumption	Cooling	kW	0.02-0.02			0.03-0.03			0.04-0.04	0.05-0.05
	Heating		0.02-0.02			0.03-0.03			0.04-0.04	0.05-0.05
Sound power level		dB(A)	54	55		58		Cooling:58 Heating:61	59	61
Sound pressure level	Cooling	dB(A)	P-Hi:38 Hi:34 Me:31 Lo:28	P-Hi:38 Hi:36 Me:32 Lo:28		P-Hi:40 Hi:38 Me:33 Lo:28	P-Hi:43 Hi:41 Me:36 Lo:33	P-Hi:43 Hi:41 Me:36 Lo:33	P-Hi:42 Hi:40 Me:37 Lo:35	P-Hi:44 Hi:42 Me:39 Lo:35
	Heating							P-Hi:44 Hi:42 Me:37 Lo:33		
Exterior dimensions H x W x D		mm	290 x 870 x 230						339 x 1197 x 262	
Net weight		kg	11.5	11		11.5			17	
Air flow	Cooling	m³/min	P-Hi:5.7 Hi:5 Me:4.5 Lo:3.6	P-Hi:8.5 Hi:8 Me:6 Lo:5		P-Hi:11 Hi:10 Me:8 Lo:7	P-Hi:12 Hi:11 Me:9 Lo:8	P-Hi:12 Hi:11 Me:9 Lo:8	P-Hi:21 Hi:19 Me:16 Lo:14	P-Hi:23 Hi:21 Me:19 Lo:16
	Heating							P-Hi:13 Hi:12 Me:10 Lo:8		
Outside air intake			Not possible							
Air filter, Q'ty			Polypropylene net x2 (Washable)							
Remote control(option)			wired:RC-EX3A, RC-E5, RCH-E3 wireless:RCN-K-E2						wired:RC-EX3A, RC-E5, RCH-E3 wireless:RCN-K71-E2	
Installation data Refrigerant piping size		mm(in)	Liquid line:ø6.35(1/4") Gas line:ø9.52(3/8")			Liquid line:ø6.35(1/4") Gas line:ø12.7(1/2")			Liquid line:ø9.52(3/8") Gas line:ø15.88(5/8")	

1. The data are measured under the following conditions(ISO-T1). Cooling: Indoor temp. of 27ºCDB, 19ºCWB, and outdoor temp. of 35ºCDB. Heating: Indoor temp. of 20ºCDB, and outdoor temp. of 7ºCDB, 6ºCWB.
2. Sound pressure level indicates the value in an anechoic chamber. During operation these values are somewhat higher due to ambient conditions.

Dimensions

All measurements in mm.

FDK15KXZE1-W, 22KXZE1-W, 28KXZE1-W, 36KXZE1-W, 45KXZE1-W, 56KXZE1-W
FDK15KXZE1, 22KXZE1, 28KXZE1, 36KXZE1, 45KXZE1, 56KXZE1

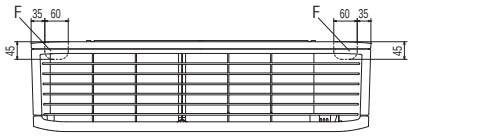

Symbol	Content		
	Model	15,22,28	36,45,56
A	Gas piping	φ9.52 (3/8") (Flare)	φ12.7 (1/2") (Flare)
B	Liquid piping	φ6.35 (1/4") (Flare)	
C	Hole on wall for right rear piping	(φ65)	
D	Hole on wall for left rear piping	(φ65)	
E	Drain hose	VP16 (O.D.22)	
F	Outlet for wiring (on both side)		

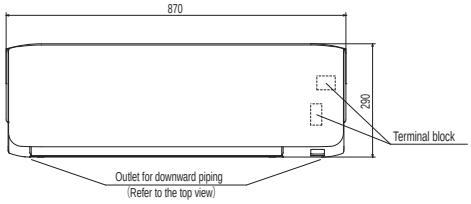

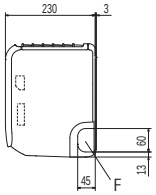

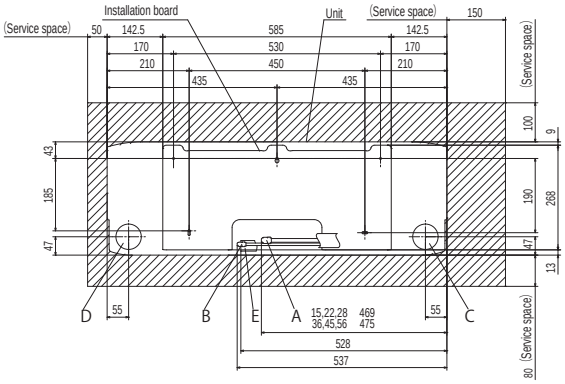

Space for installation and service when viewing from the front

Note (1) The model name label is attached on the right side of the unit.

FDK71KXZE1-W, 90KXZE1-W
FDK71KXZE1, 90KXZE1

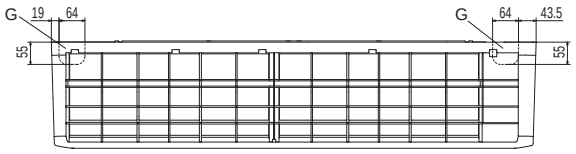

Symbol	Content	
A	Gas piping	φ15.88 (5/8") (Flare)
B	Liquid piping	φ9.52 (3/8") (Flare)
C	Hole on wall for right rear piping	(φ65)
D	Hole on wall for left rear piping	(φ65)
E	Drain hose	VP16 (O.D.22)
F	Outlet for wiring (on both side)	
G	Outlet for piping (on both side)	

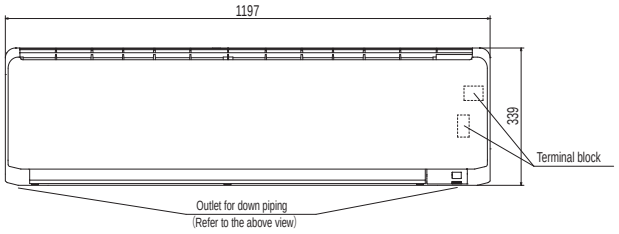

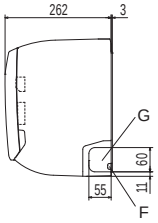

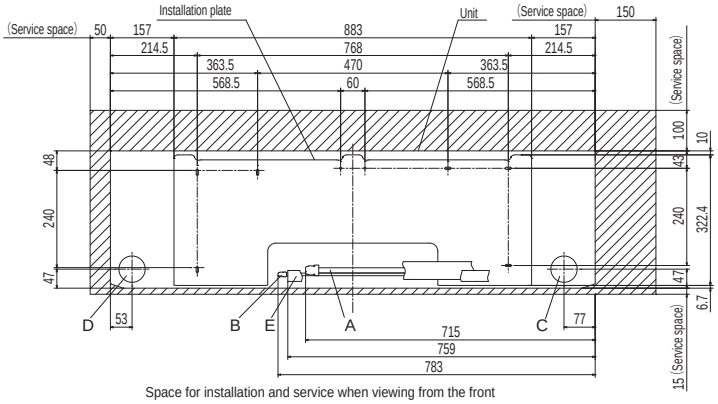

Space for installation and service when viewing from the front

Note (1) The model name label is attached on the underside of the indoor unit.

Ceiling Suspended FDE

Model No.
FDE36KXZE1
FDE45KXZE1
FDE56KXZE1
FDE71KXZE1
FDE112KXZE1
FDE140KXZE1

Remote control (option)

Wired

RC-EX3A RC-E5 RCH-E3

Wireless

RCN-E-E3

Flap control system

Selection of flap position is possible. A flap can be set at different angles.

*The wireless remote control is not applicable to the flap control system.

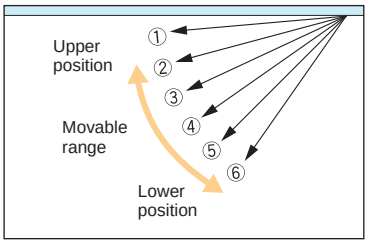

Lighter than ever

By decreasing the number of fan motors from two to one, we reduced the overall weight of our FDE units.

	Previous		Current	
FDE71	37	➡	33	4kg less!!
FDE112	49	➡	43	6kg less!!
FDE140	49	➡	43	6kg less!!

Reduction of sound pressure level (Lo mode)

We achieved the industry's lowest sound pressure levels by decreasing air flow volume, decreasing pressure loss with employment of one fan motor and optimising casing and distributor shape.

(comparison of previous model)

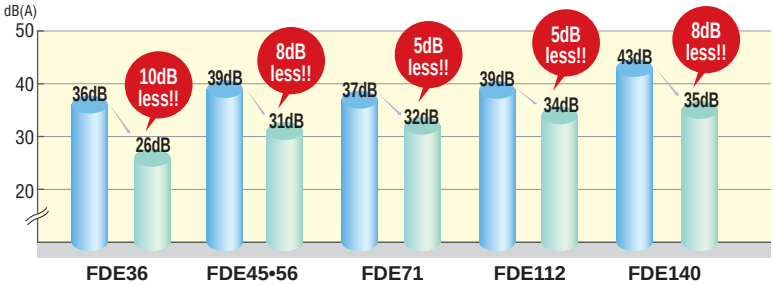

Motion Sensor (Option)

Reduce your environmental impact with our optional motion sensor feature.

By detecting presence or absence of human activity in a room, the motion sensor improves room comfort and unit energy saving performance.

LB-E

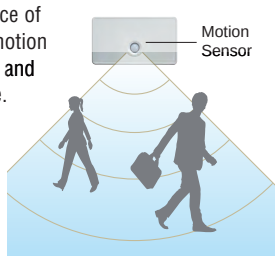

Specifications

Item		Model	FDE36KXZE1	FDE45KXZE1	FDE56KXZE1	FDE71KXZE1	FDE112KXZE1	FDE140KXZE1
Nominal cooling capacity		kW	3.6	4.5	5.6	7.1	11.2	14.0
Nominal heating capacity		kW	4.0	5.0	6.3	8.0	12.5	16.0
Power source			1 Phase 220-240V, 50Hz					
Power consumption	Cooling	kW	0.05-0.05			0.07-0.07	0.10-0.10	0.13-0.13
	Heating	kW	0.05-0.05			0.07-0.07	0.10-0.10	0.13-0.13
Sound power level		dB(A)	60			62	61	64
Sound pressure level		dB(A)	P-Hi:46 Hi:38 Me:31 Lo:26	P-Hi:46 Hi:38 Me:36 Lo:31	P-Hi:46 Hi:38 Me:36 Lo:31	P-Hi:47 Hi:39 Me:37 Lo:32	P-Hi:45 Hi:42 Me:38 Lo:34	P-Hi:48 Hi:43 Me:40 Lo:35
Exterior dimensions H x W x D		mm	210 x 1070 x 690			210 x 1320 x 690	250 x 1620 x 690	
Net weight		kg	28			33	43	
Air flow		m³/min	P-Hi:13 Hi:10 Me:7 Lo:5.5	P-Hi:13 Hi:10 Me:9 Lo:7		P-Hi:20 Hi:15 Me:13 Lo:10	P-Hi:28 Hi:25 Me:21 Lo:16.5	P-Hi:32 Hi:26 Me:23 Lo:17
Outside air intake			Not possible					
Air filter, Q'ty			Pocket Plastic net x2 (Washable)					
Remote control(option)			wired:RC-EX3A, RC-E5, RCH-E3 wireless:RCN-E-E3					
Installation data Refrigerant piping size		mm(in)	Liquid line:ø6.35(1/4") Gas line:ø12.7(1/2")			Liquid line:ø9.52(3/8") Gas line:ø15.88(5/8")		

1. The data are measured under the following conditions(ISO-T1). Cooling: Indoor temp. of 27ºCDB, 19ºCWB, and outdoor temp. of 35ºCDB. Heating: Indoor temp. of 20ºCDB, and outdoor temp. of 7ºCDB, 6ºCWB.
2. Sound pressure level indicates the value in an anechoic chamber. During operation these values are somewhat higher due to ambient conditions.

Dimensions

All measurements in mm.

FDE36KXZE1, 45KXZE1, 56KXZE1

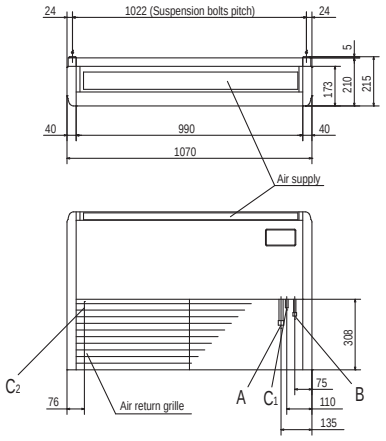

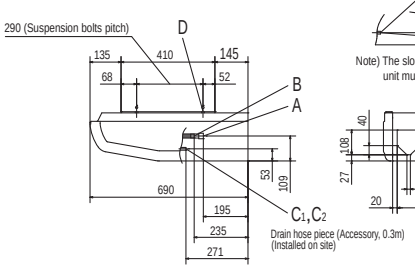

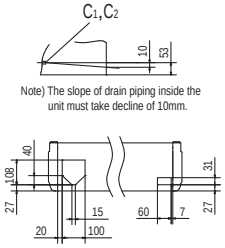

Note) The slope of drain piping inside the unit must take decline of 10mm.

Symbol	Content	
A	Gas piping	ø12.7 (1/2") (Flare)
B	Liquid piping	ø6.35 (1/4") (Flare)
C 1,2	Drain piping	VP20 (I.D.20)
D	Hole for suspension bolt	(M10 or M8)
E	Back cutout	PE cover
F	Top cutout	Plate cover
G	Hole for drain piping (for left back)	(Knock out)

Space for installation and service

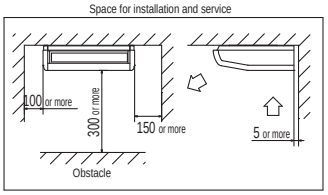

Make a space of 4000 or more between the units when installing more than one.

Position of top cutout and back cutout

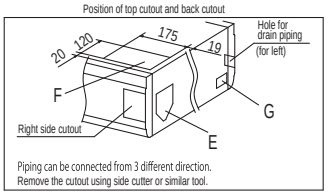

Note(1)The model name label is attached on the fan casing inside the air return grille.

FDE71KXZE1

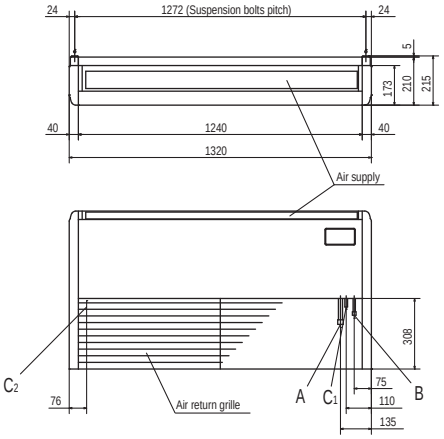

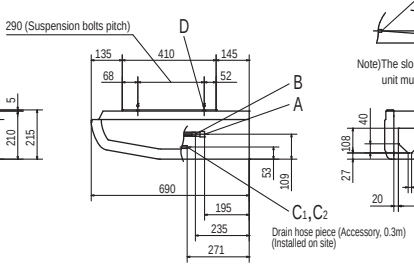

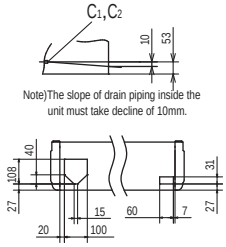

Note)The slope of drain piping inside the unit must take decline of 10mm.

Symbol	Content	
A	Gas piping	ø15.88 (5/8") (Flare)
B	Liquid piping	ø9.52 (3/8") (Flare)
C 1,2	Drain piping	VP20 (I.D.20)
D	Hole for suspension bolt	(M10 or M8)
E	Back cutout	PE cover
F	Top cutout	Plate cover
G	Hole for drain piping(for left back)	(Knock out)

Space for installation and service

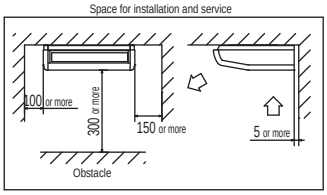

Make a space of 4500 or more between the units when installing more than one.

Position of top cutout and back cutout

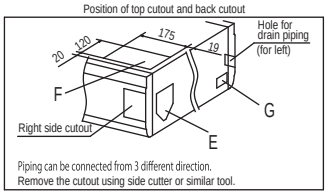

Note(1)The model name label is attached on the fan casing inside the air return grille.

FDE112KXZE1, 140KXZE1

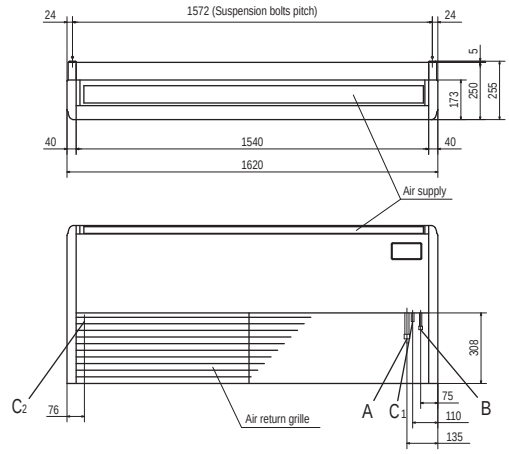

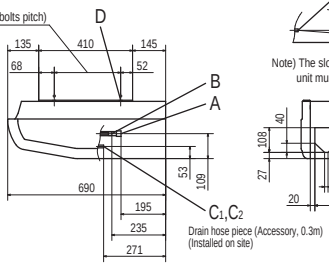

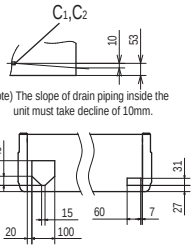

Note) The slope of drain piping inside the unit must take decline of 10mm.

Symbol	Content	
A	Gas piping	ø15.88 (5/8") (Flare)
B	Liquid piping	ø9.52 (3/8") (Flare)
C1,2	Drain piping	VP20 (I.D.20)
D	Hole for suspension bolt	(M10 or M8)
E	Back cutout	PE cover
F	Top cutout	Plate cover
G	Hole for drain piping (for left back)	(Knock out)

Space for installation and service

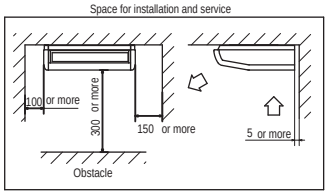

Make a space of 5000 or more between the units when installing more than one.

Position of top cutout and back cutout

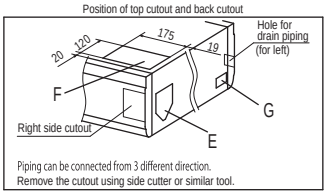

Note(1)The model name label is attached on the fan casing inside the air return grille.

Floor Standing -2way- FDFW

Model No.
FDFW28KXE6F
FDFW45KXE6F
FDFW56KXE6F

Auto air outlet selection

Remote control (option)

Wired

RC-EX3A **RC-E5** **RCH-E3**

Wireless

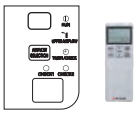

RCN-FW-E2

Sophisticated Design

With an elegant semi flat front panel in stylish white, the new series fit in various kinds of rooms and create relaxing atmosphere. Choice of wall hanging, floor standing or behind gallery installation is available.

Quiet Operation

Thanks to the optimum balance of air outlet direction and sufficient air flow volume, the sound level has been minimized. The level of FDFW28KXE6F in the cooling Lo mode is only 30dB(A).

Flap control system

Selection of flap position is possible. A flap can be set at different angles.

*The wireless remote control is not applicable to the flap control system.

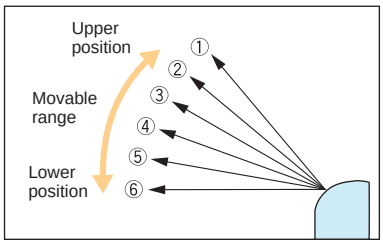

Convenient to use operation

Simultaneous lower and upper air outlets or upper outlet can be selected by air flow direction button. Further control can be arranged by a remote control.

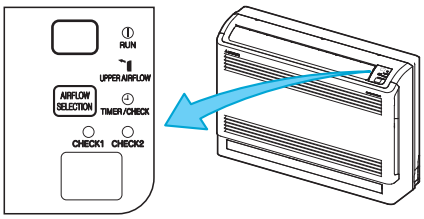

(In case of use of wireless remote control)

Specifications

Item		Model	FDFW28KXE6F	FDFW45KXE6F	FDFW56KXE6F
Nominal cooling capacity		kW	2.8	4.5	5.6
Nominal heating capacity		kW	3.2	5.0	6.3
Power source			1 Phase 220-240V, 50Hz		
Power consumption	Cooling	kW	0.02-0.02	0.02-0.02	0.03-0.03
	Heating		0.02-0.02	0.02-0.02	0.03-0.03
Sound power level		dB(A)	55	57	60
Sound pressure level		dB(A)	Hi:36 Me:34 Lo:30	Hi:38 Me:36 Lo:33	Hi:44 Me:37 Lo:33
Exterior dimensions H x W x D		mm	600x860x238		
Net weight		kg	19	20	
Air flow (Standard)		m³/min	Hi:9 Me:8 Lo:7		Hi:11 Me:9 Lo:8
Air filter, Q'ty			Polypropylene net x1 (Washable)		
Remote control(option)			wired:RC-EX3A, RC-E5, RCH-E3 wireless:RCN-FW-E2		
Installation data Refrigerant piping size		mm(in)	Liquid line:ø6.35(1/4") Gas line:ø9.52(3/8")	Liquid line:ø6.35(1/4") Gas line:ø12.7(1/2")	

1. The data are measured under the following conditions(ISO-T1). Cooling: Indoor temp. of 27ºCDB, 19ºCWB, and outdoor temp. of 35ºCDB. Heating: Indoor temp. of 20ºCDB, and outdoor temp. of 7ºCDB, 6ºCWB.
2. Sound pressure level indicates the value in an anechoic chamber. During operation these values are somewhat higher due to ambient conditions.

Dimensions

All measurements in mm.

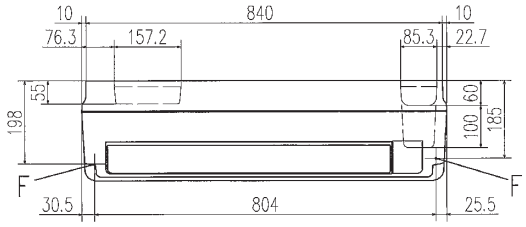

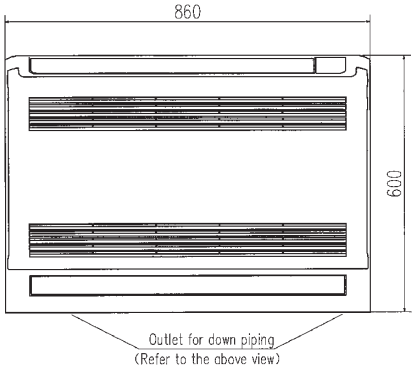

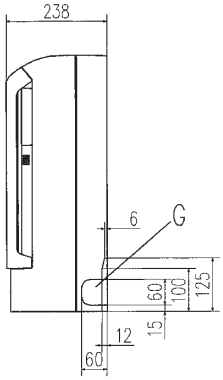

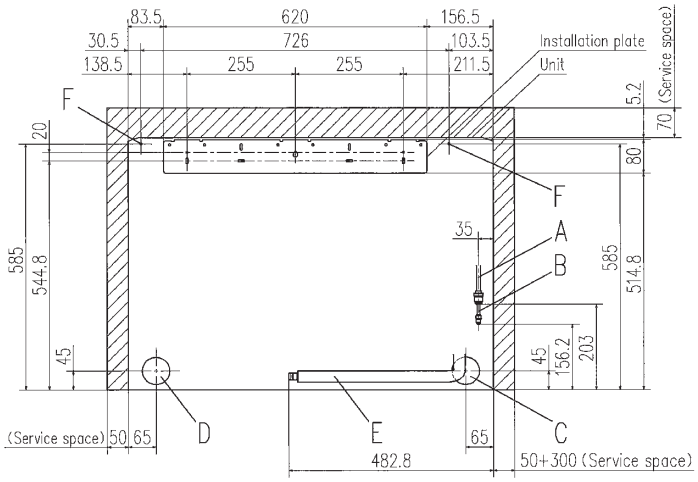

Space for installation and service when viewing from the front

Symbol	Content		
	Model	FDFW28KXE6F	FDFW45KXE6F,56KXE6F
A	Gas piping	ϕ9.52 (3/8") (Flare)	ϕ12.7 (1/2") (Flare)
B	Liquid piping	ϕ6.35 (1/4") (Flare)	
C	Hole on wall for right rear piping	(ϕ65)	
D	Hole on wall for left rear piping	(ϕ65)	
E	Drain hose	VP16 (I.D.16)	
F	Screw point fasten the indoor unit	ϕ5	
G	Outlet for piping (on both side)		

Notes
(1) The model name label is attached on the rightside of the unit.
(2) In case of wall installation, leave the unit 150mm or less from the floor.

Floor Standing (with casing) FDFL
Floor Standing (without casing) FDFU

Remote control (option)

Wired

RC-EX3A RC-E5 RCH-E3

Wireless

RCN-KIT4-E2

Model No.
FDFL71KXE6F

FDFU28KXE6F
FDFU45KXE6F
FDFU56KXE6F
FDFU71KXE6F

FDFL

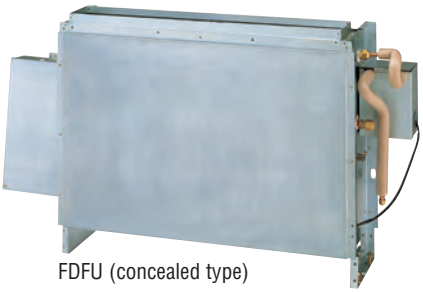

FDFU (concealed type)

Motion Sensor NEW (Option)

The optional motional sensor on our floor standing units saves energy by operations by detecting human movement. Our smart technology provides energy saving control by shifting set temperature by detecting human activity.

LB-KIT2

Compact design at 630mm height

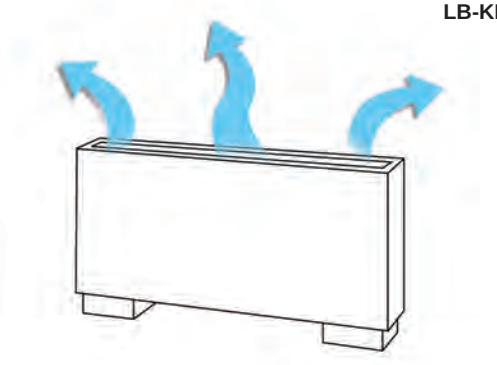

Wider air flow for optimum comfort

Specifications

Item		Model	FDFL71KXE6F	FDFU28KXE6F	FDFU45KXE6F	FDFU56KXE6F	FDFU71KXE6F
Nominal cooling capacity		kW	7.1	2.8	4.5	5.6	7.1
Nominal heating capacity		kW	8.0	3.2	5.0	6.3	8.0
Power source			1 Phase 220-240V, 50Hz				
Power consumption	Cooling	kW	0.09-0.10	0.09-0.10			
	Heating	kW	0.09-0.10	0.09-0.10			
Sound power level		dB(A)	62	58	60		
Sound pressure level		dB(A)	Hi:43 Me:41 Lo:40	Hi:41 Me:38 Lo:36	Hi:43 Me:41 Lo:40		
Exterior dimensions H x W x D		mm	630x1481x225	630x1087x225			630x1372x225
Net weight		kg	40	25			32
Air flow (Standard)		m3/min	Hi:18 Me:15 Lo:12	Hi:12 Me:11 Lo:10	Hi:14 Me:12 Lo:10		Hi:18 Me:15 Lo:12
Air filter, Q'ty			Polypropylene net x1 (Washable)				
Remote control(option)			wired:RC-EX3A, RC-E5, RCH-E3 wireless:RCN-KIT4-E2				
Installation data Refrigerant piping size		mm(in)	Liquid line:ø9.52(3/8") Gas line:ø15.88(5/8")	Liquid line:ø6.35(1/4") Gas line:ø9.52(3/8")	Liquid line:ø6.35(1/4") Gas line:ø12.7(1/2")		Liquid line:ø9.52(3/8") Gas line:ø15.88(5/8")

1. The data are measured under the following conditions(ISO-T1). Cooling: Indoor temp. of 27ºCDB, 19ºCWB, and outdoor temp. of 35ºCDB. Heating: Indoor temp. of 20ºCDB, and outdoor temp. of 7ºCDB, 6ºCWB.
2. Sound pressure level indicates the value in an anechoic chamber. During operation these values are somewhat higher due to ambient conditions.

Dimensions

All measurements in mm.

FDFL

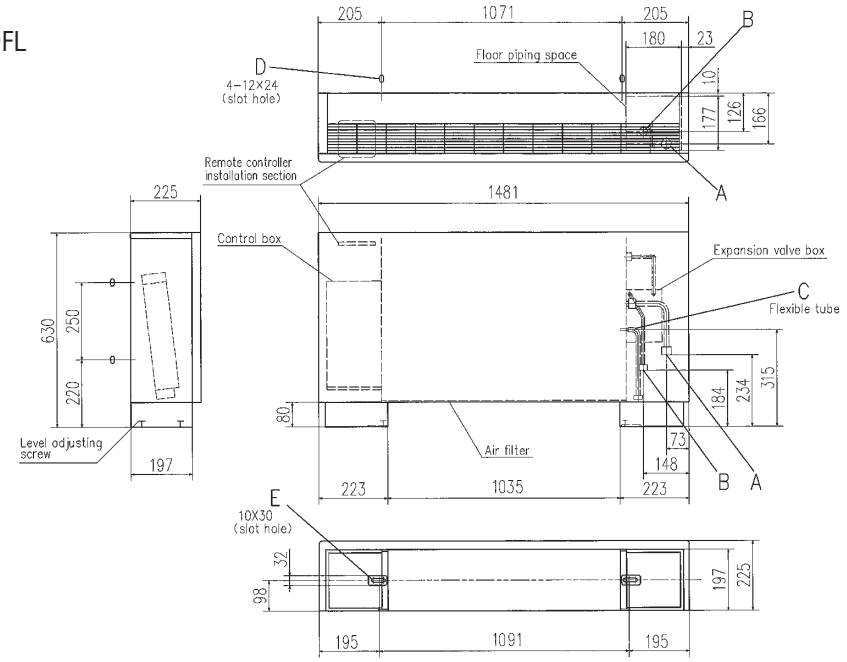

Symbol	Content	
	Model	FDFL71KXE6F
A	Gas piping (Accessory)	ϕ15.88 (5/8") (Flare)
B	Liquid piping	ϕ9.52 (3/8") (Flare)
C	Drain piping (Accessory)	PT20A female screw, 360mm
D	Slot hole for wall mounting	(M10)
E	Metal plate for floor mounting (Accessory)	(M8)

Note (1) The model name label is attached on the lid of the control box.

Space for installation and service

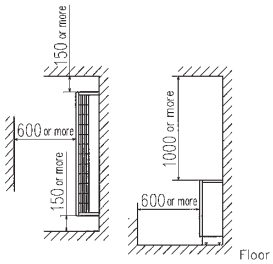

FDFU

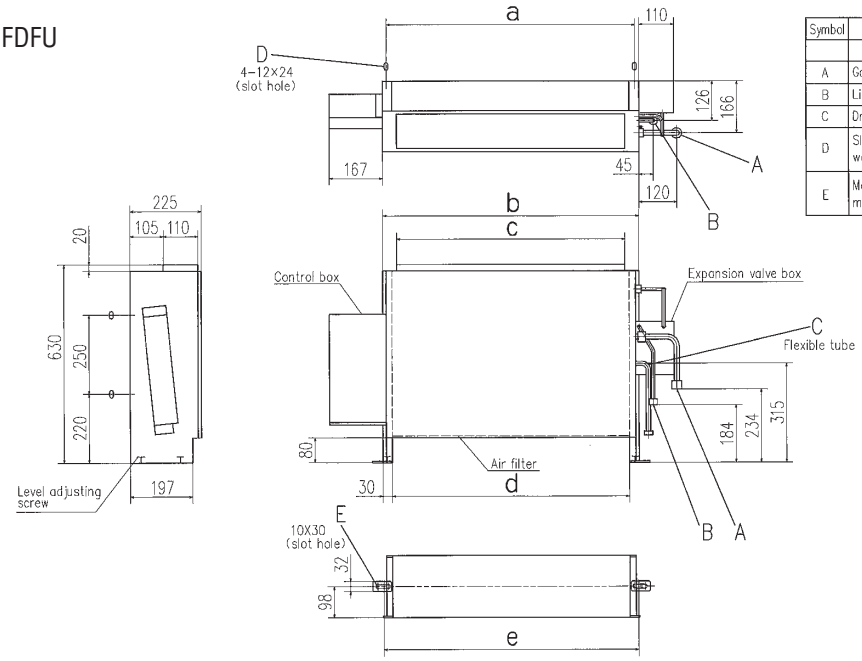

Symbol	Content			
	Model	FDFU28KXE6F	FDFU45KXE6F,56KXE6F	FDFU71KXE6F
A	Gas piping (Accessory)	ϕ9.52(3/8")(Flare)	ϕ12.7 (1/2")(Flare)	ϕ15.88 (5/8")(Flare)
B	Liquid piping	ϕ6.35 (1/4")(Flare)		ϕ9.52 (3/8")(Flare)
C	Drain piping (Accessory)	PT20A female screw, 360mm		PT20A female screw, 360mm
D	Slot hole for wall mounting	(M10)		(M10)
E	Metal plate for floor mounting (Accessory)	(M8)		(M8)

Note (1) The model name label is attached on the lid of the control box.

Space for installation and service

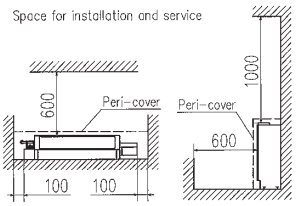

Dimension Table

Unit:mm

model	a	b	c	d	e
FDFU28KXE6F, 45KXE6F, 56KXE6F	786	810	722	750	806
FDFU71KXE6F	1071	1095	1007	1035	1091

Outdoor Air Processing unit
FDU-F

Model No.
FDU650FKXZE1
FDU1100FKXZE1
FDU1800FKXZE1
FDU2400FKXZE1

Remote control (option)

Wired

RC-EX3A **RC-E5** **RCH-E3**

Wireless

RCN-KIT4-E2

Create a fresher environment with the Outdoor Air Processing feature

Connect your KXZ system to an Outdoor Air Processing unit with one streamlined system. This advanced technology allows you to enjoy a fresh and comfortable air supply.

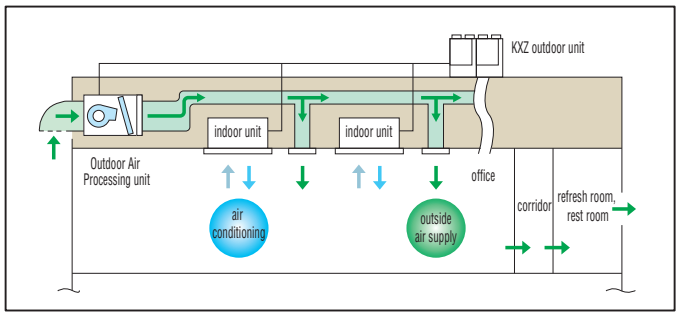

Motion Sensor (Option)

Built into the ceiling or wall plane, our motion sensor smart technology improves energy saving performance and overall room comfort.

LB-KIT2

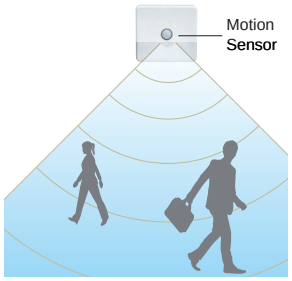

Compact design

Compact design at just 280(650, 1100), 379(1800, 2400)mm in height, high static pressure of 200Pa and the industry's lowest noise level can meet various kind of installation locations for offices, refresh rooms, restrooms and kitchens of restaurants etc.

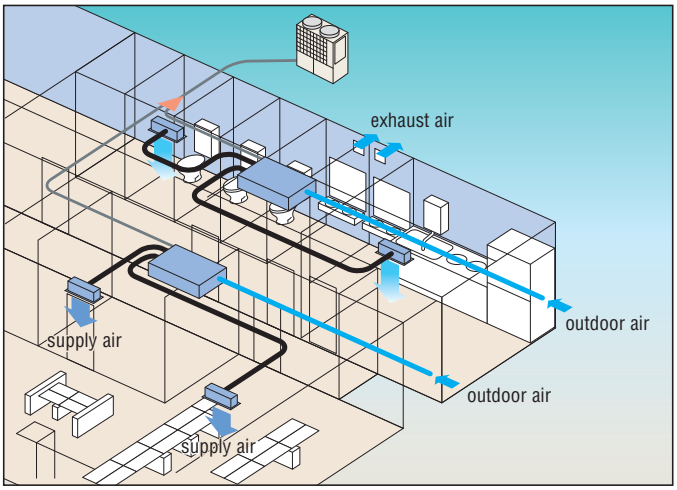

(1) This unit is the specific unit for processing the outdoor air temperature closer to the room temperature. For conditioning the room temperature a dedicated air conditioner is required additionally.
(2) This unit monitors the outdoor air temperature and controls the thermostat's ON/OFF at the setting temperature by the remote controller, which indicates the outdoor air temperature for controlling the thermostat's ON/OFF. When the thermostat is turned OFF, the operation is changed to the fan mode so that unprocessed outdoor air will be blown into the room directly. Therefore place the air outlet port or orient the air outlet direction not to blow air directly to persons in the room, especially in small room such as a restroom and/or sanitary hot water supplying room.
(3) It is strictly prohibited to monitor the room temperature by switching to the thermistor at the remote controller side and/or the optional remote thermistor. Otherwise dew formation at air outlet port and/or dew dripping may occur during cooling operation due to the lower outdoor air temperature. Therefore keep the remote controller of this unit in place closer to the administrator so as not to be touched freely by the end user.
(4) Dehumidifying operation with this unit is prohibited.
(5) When handing over this unit to the end user, make sure to explain sufficiently about the foregoing cautions, the installation place and usage of remote control for this unit and the location of the air outlet.

Connectivity with Outdoor units

FDU-F series are connectable to 8~60HP KXZ outdoor units, not connectable to 4~6HP, KXZ Lite.

Combination with Outdoor units

	case	Combination
A	Only OA processing units are connected with outdoor units.	The total capacity of FDU-F is 50~100% of outdoor capacity and max quantity of FDU-F is 2 units.
B	Both of OA processing units and dedicated air conditioner are connected with outdoor units.	The total capacity of FDU-F and dedicated air conditioners is 50~100% of outdoor capacity and max quantity of FDU-F should be below 30% of outdoor unit capacity.

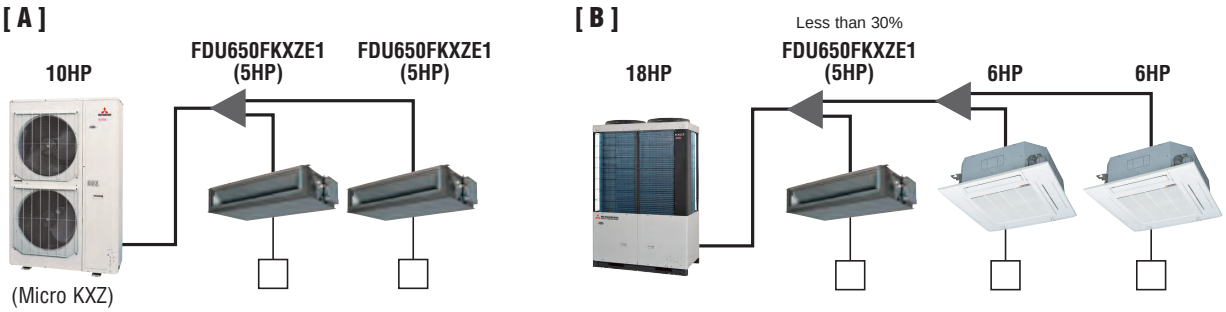

Concept (Difference between FDU-F and SAF)

SAF is the energy recovery ventilation unit which can recover heat energy from exhaust air to supply air and "has no air processing function, but FDU-F is an air processing unit which can treat the supply air closer to room temperature by cooling or heating in connection with KXZ refrigerant system and exhaust air is discharged to outside of the room.

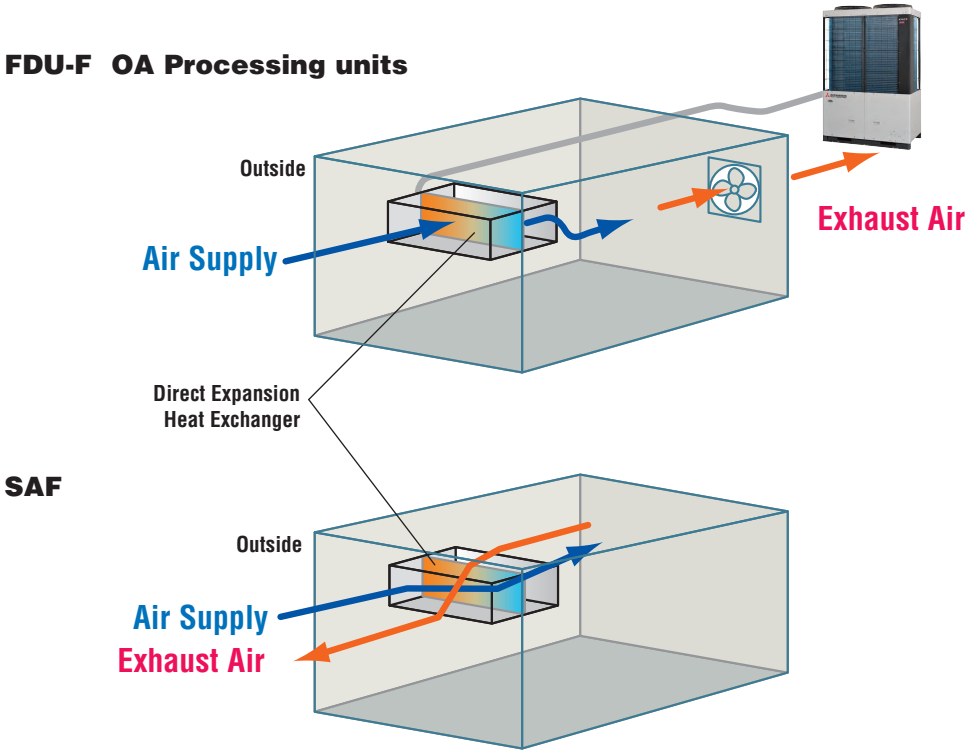

Specifications

Item		Model	FDU650FKXZE1	FDU1100FKXZE1	FDU1800FKXZE1	FDU2400FKXZE1
Nominal cooling capacity		kW	9.0	14.0	22.4	28.0
Nominal heating capacity		kW	6.5	10.5	16.0	21.5
Power source			1 Phase 220-240V, 50Hz			
Power consumption	Cooling	kW	0.24-0.25	0.35-0.36	1.16-1.20	1.16-1.20
	Heating		0.24-0.25	0.35-0.36	1.16-1.20	1.16-1.20
Sound pressure level		dB(A)	Hi:31	Hi:37	Hi:42	Hi:45
Exterior dimension HxWxD		mm	280x950x635	280x1370x740	379x1600x893	
Net weight		kg	34	54	89	89
Air flow (Standard)		m³/min	Hi:11	Hi:18	Hi:30	Hi:40
External static pressure		Pa	200 (at Hi Air flow)			
Air filter, Q'ty			Procure locally			
Remote control(option)			wired:RC-EX3A, RC-E5, RCH-E3 wireless:RCN-KIT4-E2			
Installation data Refrigerating piping size		mm (in)	Liquid line:ø9.52(3/8") Gas line:ø15.88(5/8")		Liquid line:ø9.52(3/8") Gas line:ø19.05(3/4")	Liquid line:ø9.52(3/8") Gas line:ø22.22(7/8")

1. The data are measured at 33ºCDB 28ºCWB (68%RH) during cooling and 0ºCDB-2.9ºCWB (50%RH) during heating (no frost).
2. Temperature range of outdoor air must be 20~40ºCDB (32ºCWB) during cooling and 0~24ºCDB during heating.
3. Sound level indicates the value in an anechoic chamber. During operation these value are somewhat higher due to ambient conditions.
4. The factory E.S.P. setting is set within the range of 10 - 120Pa.If SW8-4 is turned to "ON", E.S.P. setting range can be changed to 10 - 200 Pa. (with RC-EX3A and RC-E5 only)

Dimensions

All measurements in mm.

FDU650FKXZE1

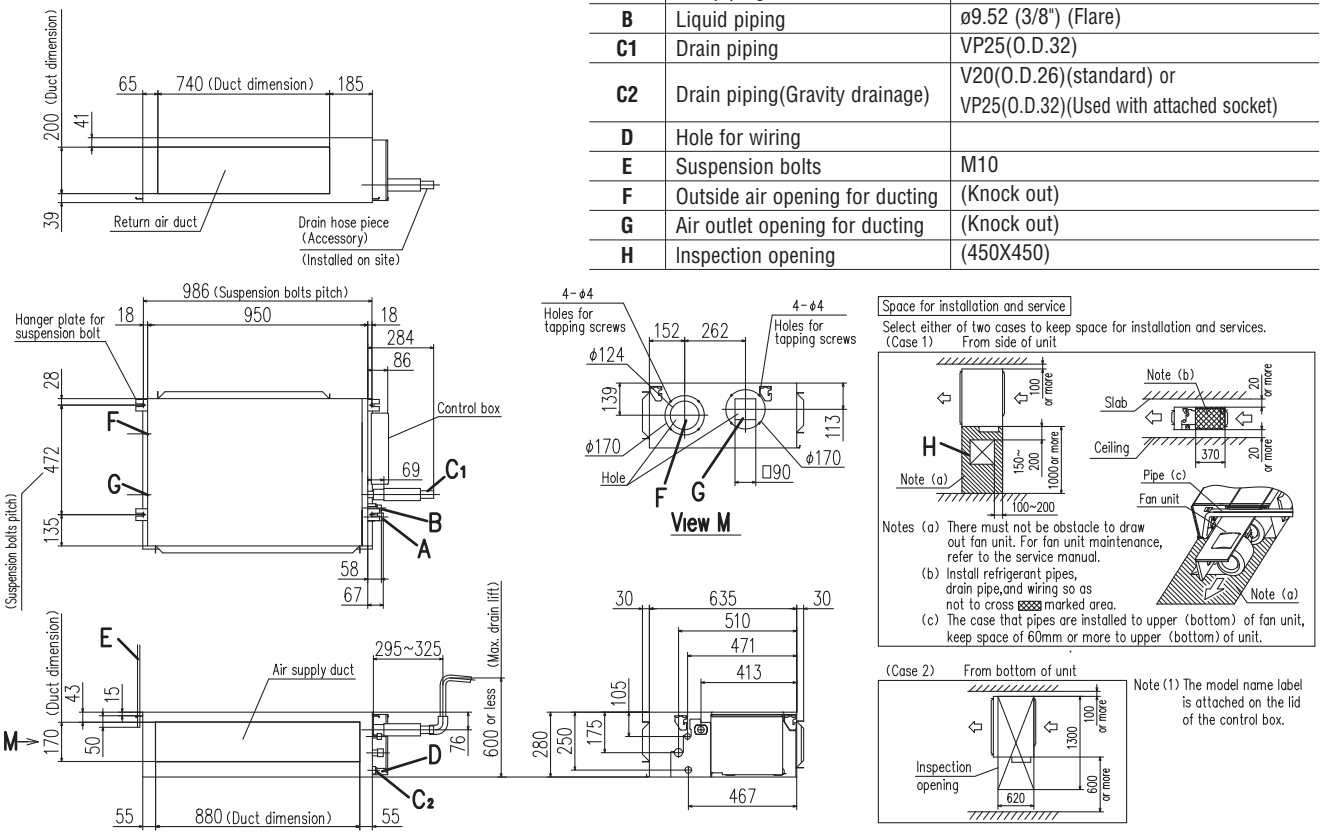

Symbol	Content	
A	Gas piping	ø15.88 (5/8") (Flare)
B	Liquid piping	ø9.52 (3/8") (Flare)
C1	Drain piping	VP25(O.D.32)
C2	Drain piping(Gravity drainage)	V20(O.D.26)(standard) or VP25(O.D.32)(Used with attached socket)
D	Hole for wiring	
E	Suspension bolts	M10
F	Outside air opening for ducting	(Knock out)
G	Air outlet opening for ducting	(Knock out)
H	Inspection opening	(450X450)

FDU1100FKXZE1

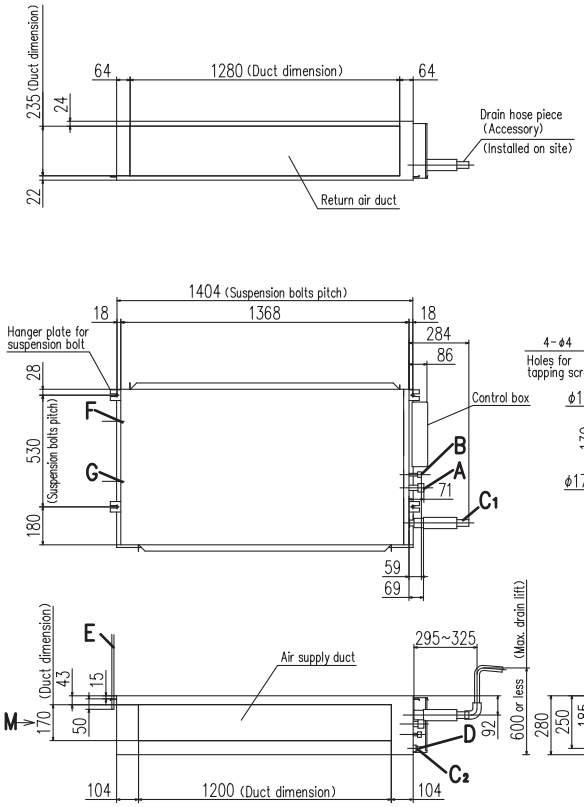

Symbol	Content	
A	Gas piping	ø15.88 (5/8") (Flare)
B	Liquid piping	ø9.52 (3/8") (Flare)
C1	Drain piping	VP25(O.D.32)
C2	Drain piping(Gravity drainage)	V20(O.D.26)(standard) or VP25(O.D.32)(Used with attached socket)
D	Hole for wiring	
E	Suspension bolts	M10
F	Outside air opening for ducting	(Knock out)
G	Air outlet opening for ducting	(Knock out)
H	Inspection opening	(450X450)

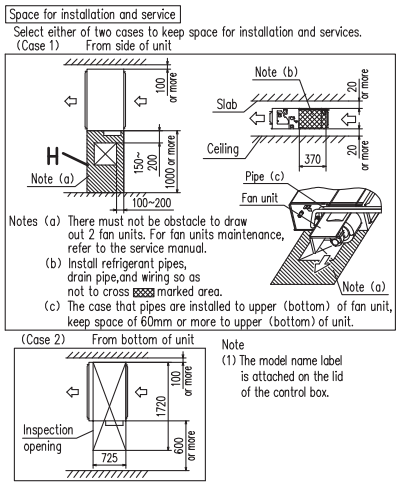

FDU1800FKXZE1, FDU2400FKXZE1

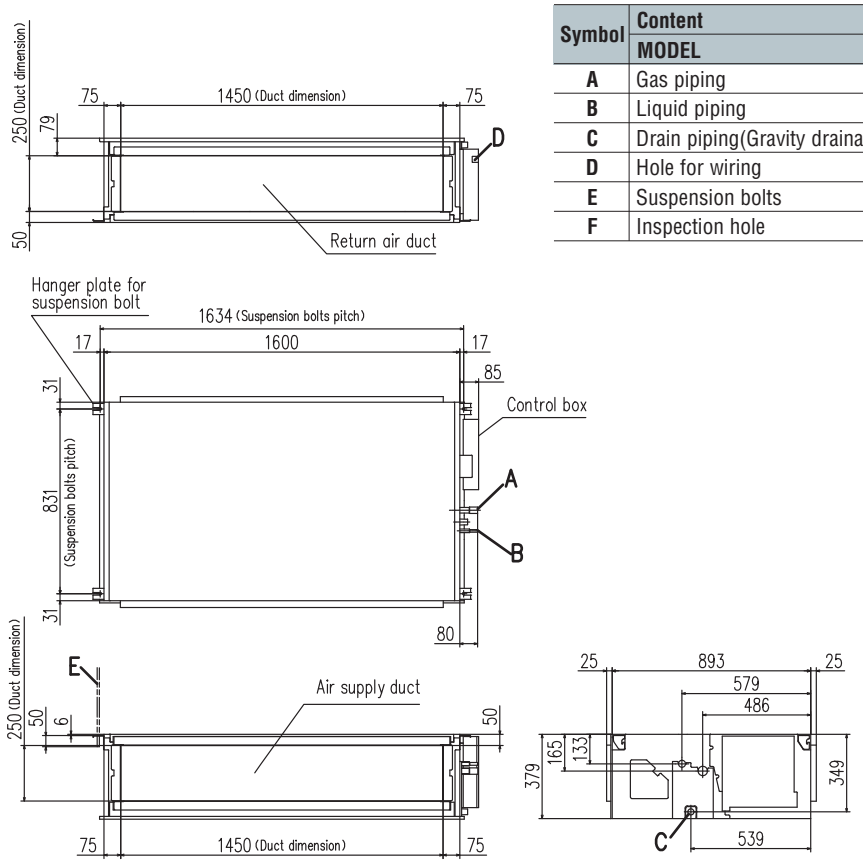

Symbol	Content		
	MODEL	1800	2400
A	Gas piping	ø19.05 (3/4")	ø22.22 (7/8")
B	Liquid piping	ø9.52 (3/8") (Brazing)	
C	Drain piping(Gravity drainage)	VP25(O.D.32)	
D	Hole for wiring		
E	Suspension bolts	M10	
F	Inspection hole	(450X450)	

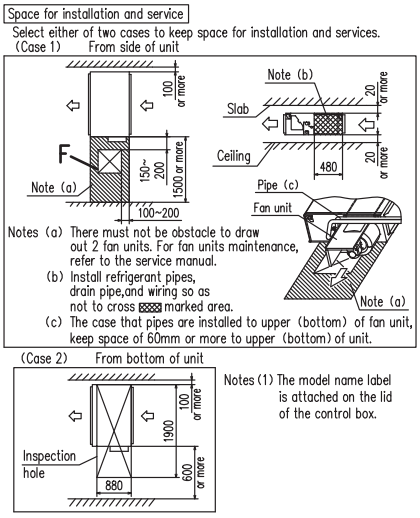

Hydro Module unit HMU

NEW

Model No.
HMU140KXZE1
HMU280KXZE1

Remote control (option)

Wired

RC-EX3H

What is the hydro module unit? (Hydro module unit = HMU)

This unit is an auxiliary device for use with the VRF type multi systems to control water temperatures.
It employs the plate heat exchanger in place of fin heat exchanger, and produces cold or hot water by exchanging heat between refrigerant and water.
Since it can produce hot or cold water using the VRF type multi systems as the heat source, it allows to configure a chiller system in a simple way on the one hand. On the other, it can expand the range of applications of air-conditioner because it can be used mixed with the multiple indoor unit for building.

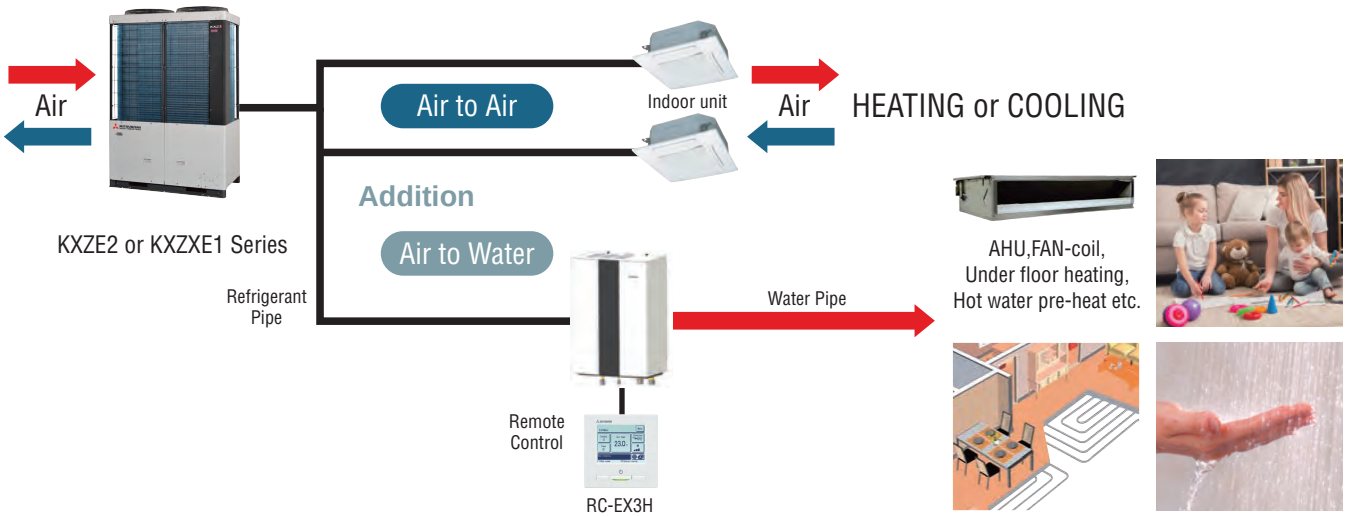

Target outlet water temperature constant control

- This is achieved by controlling compressor frequency and control of EEVs.
- Controlling the capacity of HMUs in accordance with the load.
- The HMU is designed to achieve a hot water temperature of 55°C.

Antifreeze control

- Anti-freeze protection of plate heat exchanger is enabled.

Mixed operation

- Mixed operation is possible in the air to air indoor unit and HMU.
- During the operation only of HMU , it can accommodate a wide range of outlet water temperature controlled by a dedicated control.
- When the system is in mixed operation, the HMU or air conditioner can be set as priority.

External equipment linked

- External output of interlocking signal to an external heat source for the secondary heating.
- Possible target setting temperature change from the external input. (3 points)
- Water pump control (ON / OFF) possible.

*HMU is designed for closed loop heat exchange applications. Connections to any other open loop systems (such as domestic water) should be handled via a secondary heat exchanger.

Application example

Heating system using HMU and air conditioner propose various solutions.

Office

Health clubs

Care homes

Restaurants

Hotels

School / University

Specifications

Item			Model	HMU140KXZE1	HMU280KXZE1
Connectable outdoor unit				KXZE2, KXZXE1 series	
Power source				1 Phase 220-240V, 50Hz	
Operation range	Max. cooling capacity		kW	14	28
	Max. heating capacity		kW	14	28
	Power consumption	Cooling	kW	0.316	0.316
		Heating	kW	0.316	0.316
	Max current	Cooling	A	1.54	1.54
		Heating	A	1.54	1.54
	Outdoor temperature	Cooling	℃	15-46	
		Heating	℃	-20-32(Mixed Use*1: -20-20)	
	Indoor temperature		℃	0-32(Without freezing)	
	Indoor relative humidity		%	≦ 90	
	Inlet water temperature	Cooling	℃	12-30(Mixed Use*1: 19-24)	
		Heating*2	℃	20-50(Mixed Use*1: 20-35)	
		Heating*3	℃	25-50(Mixed Use*1: 25-35)	
	Outlet water temperature	Cooling	℃	7-25(Mixed Use*1: 14-19)	
		Heating*2	℃	25-55(Mixed Use*1: 25-40)	
		Heating*3	℃	30-55(Mixed Use*1: 30-40)	
	Water flow		l/min	20 - 40	24 - 80
	External water pressure @Max. flow		bar	0.95	0.89
	Minimum suction head at 50℃		bar	0.3	
Sound pressure level@Cooling*4			dB(A)	31	32
Sound power level@Cooling*4, 6			dB(A)	48	48
Sound pressure level@Heating*5			dB(A)	27	30
Sound power level@Heating*5, 6			dB(A)	46	49
Exterior dimensions(Height x Width x Depth)			mm	860(110*7) x 550 x 400	
Exterior appearance				Ceramic white	
Weight (without water)			kg	46	48
Weight(Including water)			kg	47.8	50.6
Power source				1-phase/ 220-240V/ 50Hz	
Deviation, incoming supply			%	± 10%(Min.85% at starting)	
Minimum amount of water in the water circuit			liter	150	230
IP Grade				IP20	
Set pressure of safety valve			bar	6	
Water pipe connection				R1-1/2	
Refrigerant pipe connection (liquid / gas)				Φ9.52 / Φ15.88	Φ9.52 / Φ19.05

*1 Mixed use means HMU and air to air indoor unit mixed operation. *2 In case outdoor tempearature more than 0℃.(0℃ < Outdoor temperature)
*3 In case outdoor tempearature is 0℃ or less.(Outdoor temperature ≦ 0℃) *4 Sound test condition for cooling: Cooling condition 1.
*5 Sound test condition for heating: Heating condition 3. *6 MIC position: 1m from the center of the HMU. *7 Outside piping length.

Performance data

Indoor		Model	HMU280KXZE1
Outdoor		Model	FDC280KXZE2
Heating Nominal capacity	condition 1	kW	23.00
	condition 2	kW	23.15
	condition 3	kW	25.20
Heating power consumption	condition 1	kW	8.40
	condition 2	kW	6.90
	condition 3	kW	6.00
COP	condition 1	-	2.74
	condition 2	-	3.36
	condition 3	-	4.20
ηsh	condition 3 base		151
Cooling Nominal capacity	condition 1	kW	25.80
	condition 2	kW	18.80
Cooling power consumption	condition 1	kW	6.35
	condition 2	kW	6.25
EER	condition 1	-	4.06
	condition 2	-	3.01

Note:Heating condition 1: Inlet/outlet water temp. 47/55, Outdoor temp. 7WB/6DB. Heating condition 2: Inlet/outlet water temp. 40/45, Outdoor temp. 7WB/6DB.
Heating condition 3: Inlet/outlet water temp. 30/35, Outdoor temp. 7WB/6DB.
Cooling condition 1: Inlet/outlet water temp. 23/18, Outdoor temp. 35WB/-. Cooling condition 2: Inlet/outlet water temp. 12/7, Outdoor temp. 35WB/-.

Dimensions

All measurements in mm.

HMU140KXZE1, 280KXZE1

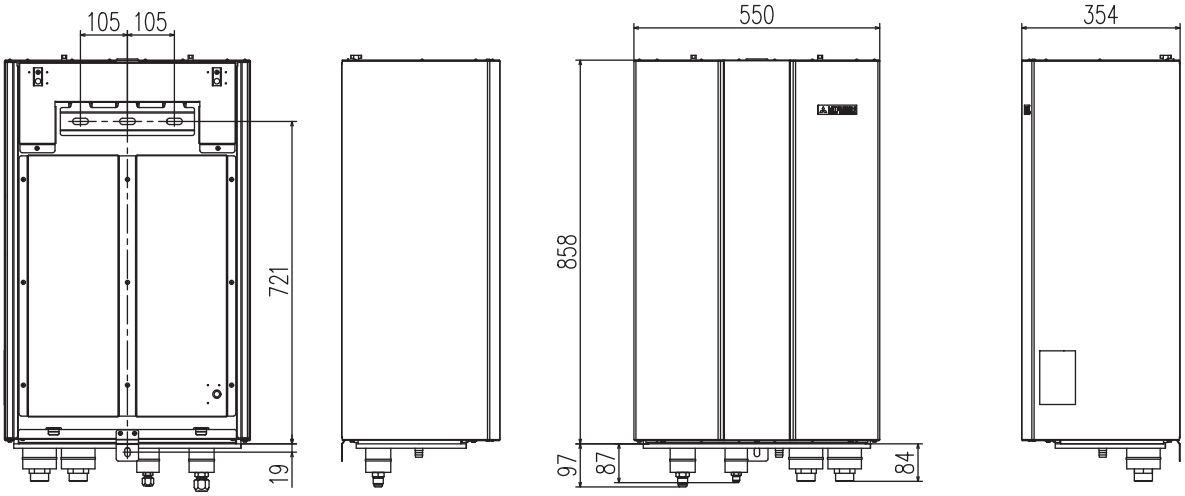

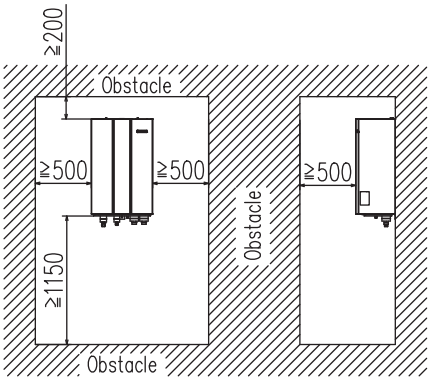

Space for installation and service

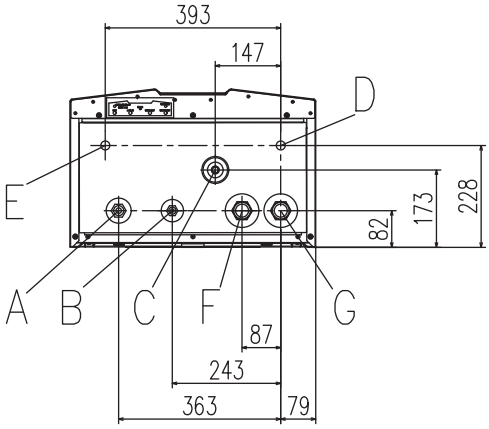

Symbol	Content	
A	Gas piping	ϕ15.88 (7/8") (Flare)
B	Liquid piping	ϕ9.52 (5/8") (Flare)
C	Drain socket (Gravity drainage)	I.D.13 , O.D.17
D	Hole for power cable	ϕ20
E	Hole for signal line	ϕ20
F	Water inlet	PT1-1/4
G	Water outlet	PT1-1/4

Fresh Air DX Assembly

Model No.
SAF-DX250E6
SAF-DX350E6
SAF-DX500E6
SAF-DX800E6
SAF-DX1000E6

Drain up kit (option, built-in type)
(600mm)

DXA-DU-E

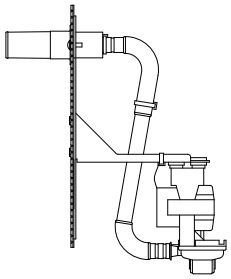

Remote control (option)

Wired

RC-E5

RCH-E3

Wireless

RCN-KIT4-E2

- SAF-DX is a heating or cooling coil incorporating KXZ series controls. It can be used in combination with our total heat exchanger. (SAF series)
- Combination of SAF-DX with other indoor units is possible. The capacity code index of each model is shown below and must be used when making the system selection. Total capacity code index must be within 100% of outdoor unit capacity code index.
- Remote control option is the same as other indoor units (see above). Connection to all Superlink controls is also possible.
- Optional condensate lift mechanism is also available (600mm height).
- Return air temp. control or supply air temp. control can be selected.

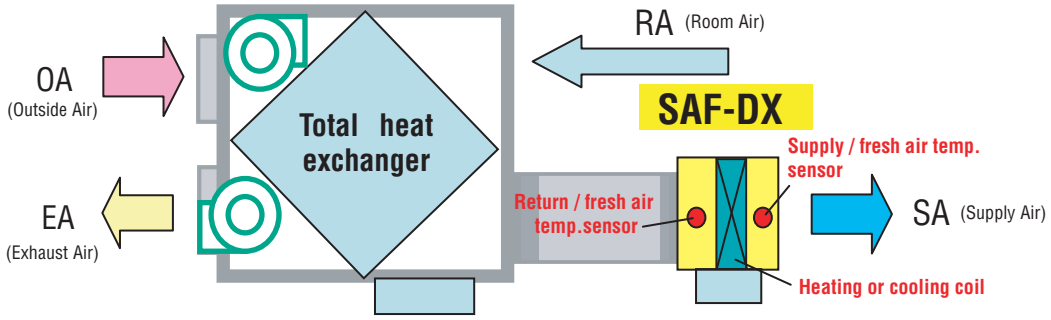

SAF-DX can provide heating or cooling to the fresh air supplied through a 3rd party air handling unit or total heat exchanger such as our SAF series.

Specifications

Item		Model	SAF-DX250E6	SAF-DX350E6	SAF-DX500E6	SAF-DX800E6	SAF-DX1000E6
Nominal cooling capacity *1		kW	2.0	2.8	3.6	5.6	6.3
Nominal heating capacity *2		kW	1.8	2.2	2.8	4.5	5.6
Capacity code			22	28	36	56	71
Power source			1 Phase 220-240V, 50Hz				
Power consumption	Cooling	W	7.2-7.2				
	Heating		7.2-7.2				
Running current	Cooling	A	0.05-0.05				
	Heating		0.05-0.05				
Exterior dimensions H x W x D		mm	315 x 452 x 422		315 x 537 x 422	315 x 682 x 422	315 x 822 x 422
Net weight		kg	12.3		13.6	16.1	18.4
Air flow (Standard)		m^3/h	250	350	500	800	1000
Internal resistance		Pa	38	66			
Remote control(option)			wired: RC-E5, RCH-E3 wireless: RCN-KIT4-E2				
Installation data Refrigerant piping size		mm(in)	Liquid line:ø6.35(1/4") Gas line:ø9.52(3/8")		Liquid line:ø6.35(1/4") Gas line:ø12.7(1/2")		Liquid line:ø9.52(3/8") Gas line:ø15.88(5/8")

(1) The data are measured at the following conditions.

Item	Return/fresh air temperature		Outdoor air temperature		Standards
Operation	DB	WB	DB	WB	
Cooling*1	27ºC	19ºC	35ºC	24ºC	ISO-T1
Heating*2	20ºC		7ºC	6ºC	

(2) This air conditioner is manufactured and tested in conformity with ISO-T1 "UNITARY AIR CONDITIONERS".

Dimensions

All measurements in mm.

SAF-DX250E6,350E6

Symbol	Content	
A	Gas piping	ϕ9.52 (3/8") (Flare)
B	Liquid piping	ϕ6.35 (1/4") (Flare)
C	Drain piping	R1
D	Hole for power source line	
E	Wiring hole for total enthalpy heat exchanger	
F	Hole for communication line	
G	Suspension bolts	M10

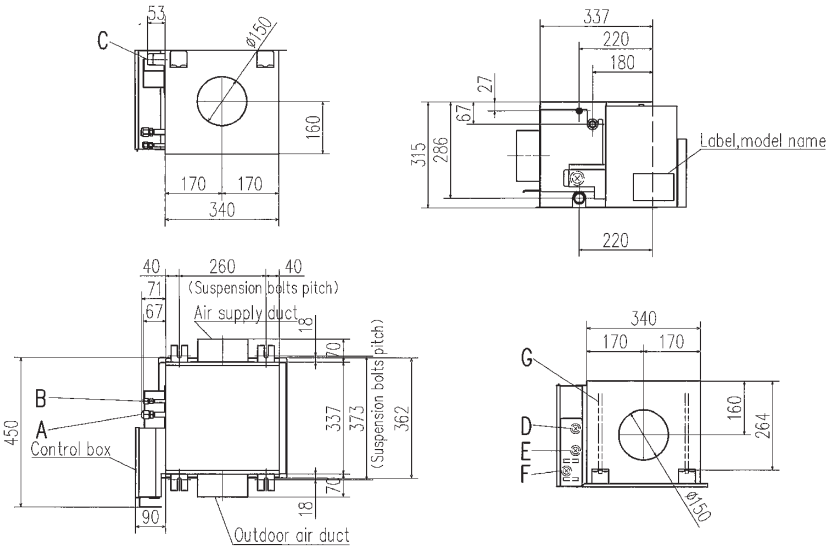

Space for installatin and service

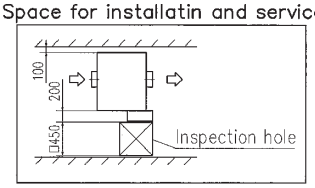

SAF-DX500E6

Symbol	Content	
A	Gas piping	ϕ12.7 (1/2") (Flare)
B	Liquid piping	ϕ6.35 (1/4") (Flare)
C	Drain piping	R1
D	Hole for power source line	
E	Wiring hole for total enthalpy heat exchanger	
F	Hole for communication line	
G	Suspension bolts	M10

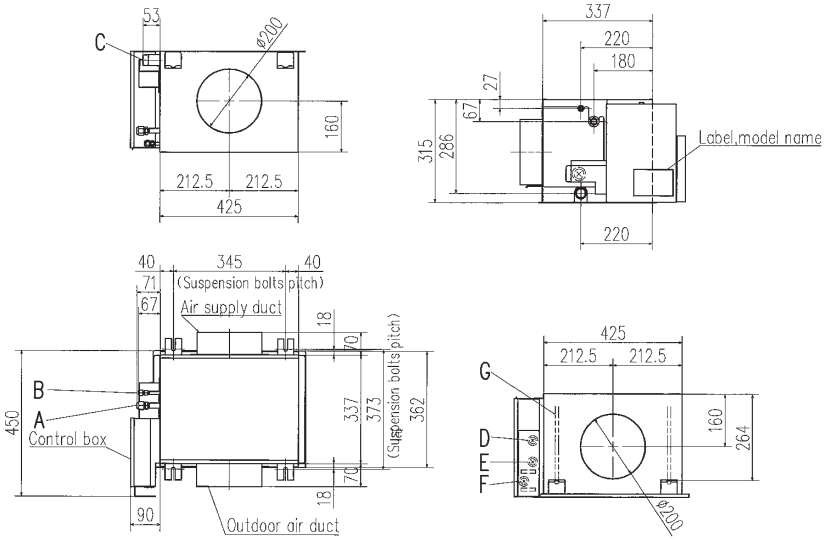

Space for installatin and service

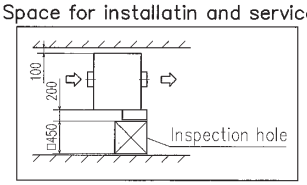

SAF-DX800E6

Symbol	Content	
A	Gas piping	ϕ12.7 (1/2") (Flare)
B	Liquid piping	ϕ6.35 (1/4") (Flare)
C	Drain piping	R1
D	Hole for power source line	
E	Wiring hole for total enthalpy heat exchanger	
F	Hole for communication line	
G	Suspension bolts	M10

Space for installatin and service

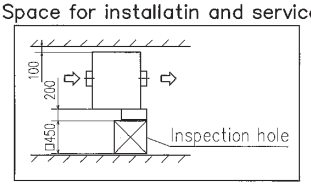

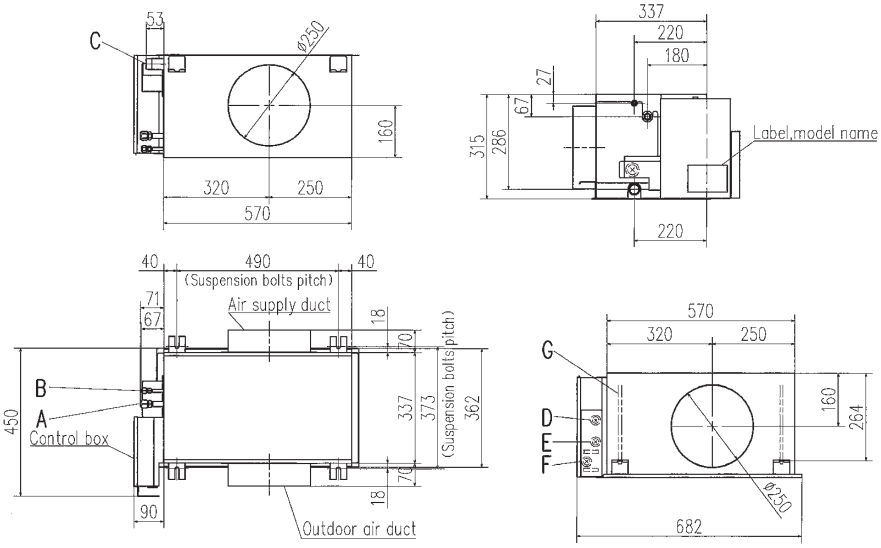

SAF-DX1000E6

Symbol	Content	
A	Gas piping	ϕ15.88 (5/8") (Flare)
B	Liquid piping	ϕ9.52 (3/8") (Flare)
C	Drain piping	R1
D	Hole for power source line	
E	Wiring hole for total enthalpy heat exchanger	
F	Hole for communication line	
G	Suspension bolts	M10

Space for installatin and service

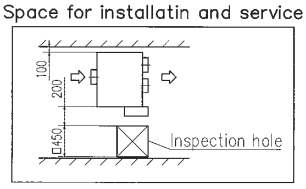

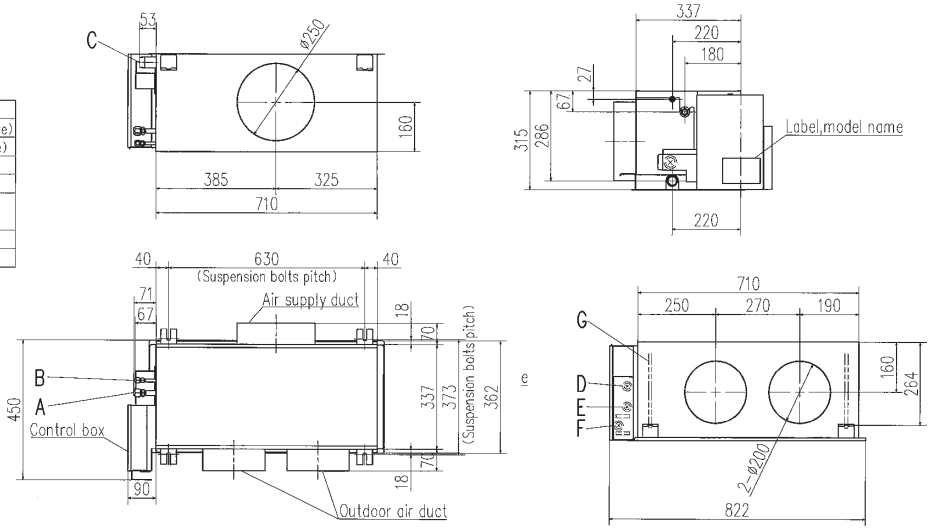

Fresh Air Ventilation and Heat Exchange unit SAF-E7

Model No.
SAF150E7
SAF250E7
SAF350E7
SAF500E7
SAF800E7
SAF1000E7

Energy Performance of Building Directive - EPBD

The EPBD function limits electrical/gas power to provide heating or cooling to commercial buildings. To use this function, the building designer needs to select energy efficient heating/cooling equipment and to minimise energy losses through ventilation systems.

SAF smart technology recovers heat energy in the atmosphere which would have otherwise been lost. It then uses this energy to warm air entering the building. The reverse happens in warmer climates where the exhausted cool air is used to partially cool the incoming air.

Increased external static pressure at UHi air flow

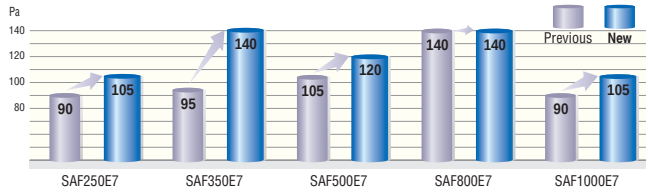

Helping you to reduce energy consumption and carbon emissions by capturing waste energy. EFBD also allows for smaller sized units as less heating/cooling requirements are needed!

Switch box (option)

Remote control
The following functions are newly available.
- ON/OFF Timer – The hour and minute of timer on/off can be set.
- Filter Sign – Announces the due time for cleaning the air filter.

Specifications

Item				Model	SAF150E7	SAF250E7	SAF350E7	SAF500E7	SAF800E7	SAF1000E7
Power source					1 Phase 220-240V, 50Hz					
Exterior dimensions Height x Width x Depth				mm	270x970x467	270x882x599	317x1050x804	317x1090x904	388x1322x884	388x1322x1134
Exterior appearance					Galvanized steel sheet					
Power input				W	92-107	108-123	178-185	204-225	360-378	416-432
Running current				A	0.42-0.45	0.49-0.51	0.81-0.77	0.93-0.94	1.64-1.58	1.89-1.80
Capacity	UHi	Enthalpy exchange efficiency	Cooling	%	63	63	66	62	65	65
			Heating		70	70	69	67	71	71
		Temperature exchange efficiency			75					
	Hi	Enthalpy exchange efficiency	Cooling		63	63	66	62	65	65
			Heating		70	70	69	67	71	71
		Temperature exchange efficiency			75					
	Lo	Enthalpy exchange efficiency	Cooling		66	65	71	64	68	70
			Heating		73	72	73	69	74	76
		Temperature exchange efficiency			77	77	78	76	76	79
Motor & Q'ty				W	10 x 2	20 x 2	40 x 2	70 x 2	180 x 2	180 x 2
Air handling equipment Fan type & Q'ty					Sirocco fan x 2					
Air flow			UHi	m^3/h	150	250	350	500	800	1000
			Hi		150	250	350	500	800	1000
			Lo		120	190	240	440	630	700
External static pressure			UHi	Pa	80	105	140	120	140	105
			Hi		70	95	60	60	110	80
			Lo		25	45	45	35	55	75
Net weight				kg	25	29	49	57	71	83
Remote control					Included					
Air filter	Supply air				Protection for element (Washable) PS400					
	Exhaust air									

(1) The data are mesured at the following conditions.

		Summer	Winter
Indoor side (Supply air)	DB	27ºC	20ºC
	WB	20ºC	14ºC
Outdoor side (Outside air)	DB	35ºC	5ºC
	WB	29ºC	2ºC
Unit around	DB	27ºC	20ºC

Structure (SAF800E7)

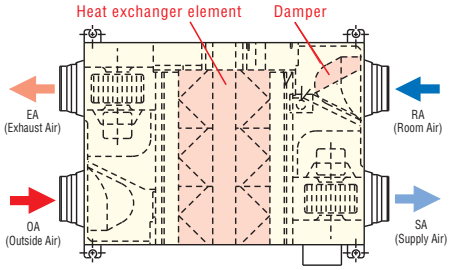

Principle of operation (simple ventilation)

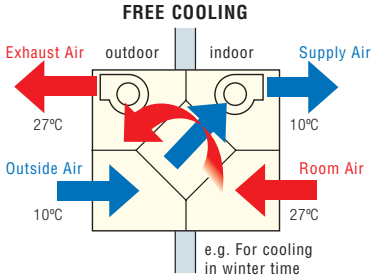

Principle of operation (heat exchanging)

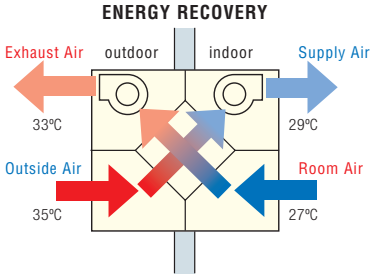

Dimensions

All measurements in mm.

SAF150E7, SAF250E7, SAF350E7, SAF500E7

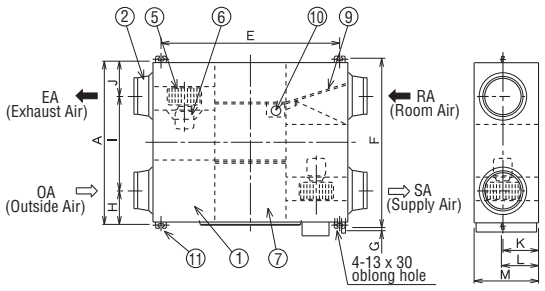

Applied duct

Model No.	Nominal diameter
SAF150E7	ø100
SAF250E7	ø150
SAF350E7	
SAF500E7	ø200

Dimension table

Unit:mm

Model	A	B	C	E	F	G	H	I	J	K	L	M	N	P
SAF150E7	467	970	49	810	525	19	82	303	82	135	159	270	ø98	ø110
SAF250E7	599	882	95		655		142	315	142				ø144	ø164
SAF350E7	804	1050	70	978	860		112	580	112	159	182	317		ø164
SAF500E7	904	1090		1018	960		132	640	132				ø194	ø210

SAF800E7, SAF1000E7

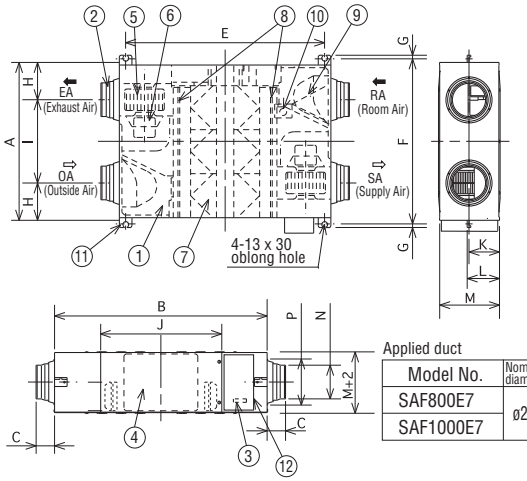

Applied duct

Model No.	Nominal diameter
SAF800E7	ø250
SAF1000E7	

Dimension table

Unit:mm

Model	A	B	C	E	F	G	H	I	J	K	L	M	N	P
SAF800E7	884	1322	85	1250	940	19	228	428	612	194	218	388	ø242	ø258
SAF1000E7	1134				1190			678						

NO.	Name	Qt'y
①	Frame	1
②	Adaptor	4
③	Terminal board	1
④	Inspection Cover	1
⑤	Fan	2 ※
⑥	Motor	2 ※
⑦	Heat Exchange Element SAF150E7 SAF250E7 SAF350E7 SAF500E7 SAF800E7 SAF1000E7	 1 1 2 2 3 4
⑧	Filter	2
⑨	Damper	1
⑩	Damper Motor	1
⑪	Suspension fitting	4
⑫	Electrical components box	1

※Model SAF350E7, SAF500E7 have different fan and motor locations.

Installation reference

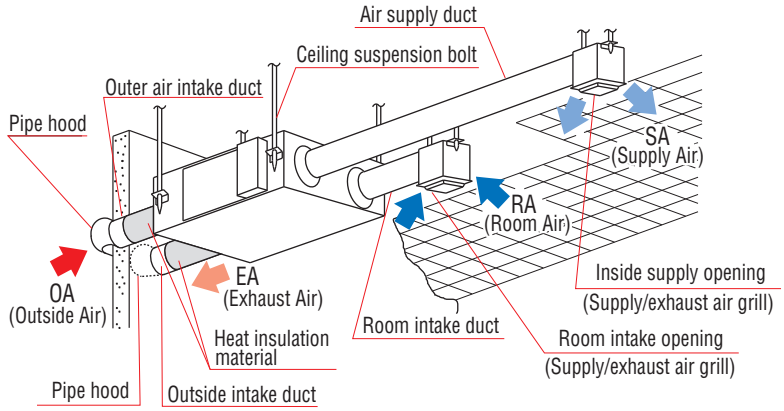

Note:An inspection port is needed for cleaning the heat exchanger and filter 1 or 2 times a year.

EEV-KIT

- EEV-KIT is the control kit for operating the locally provided AHU or FCU with direct expansion heat exchanger coils in connection with the KXZ system.
  (AHU : Air Handling Unit, FCU : Fan Coil Unit)
- EEV-KIT is composed of one EEV-Control ASSY and one EEV-Set.

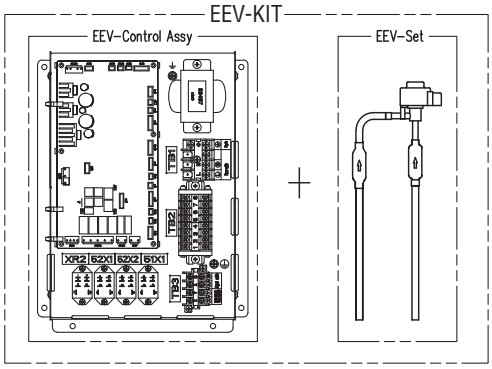

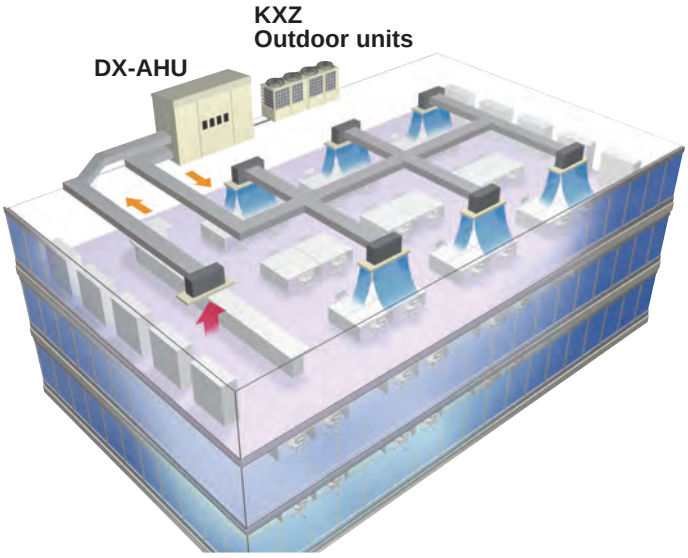

DX : Direct expansion coil

Features

EEV-Control Assy has 2 types.

Refrigeration system	EEV-Control Assy	
	EEVKIT6-E-M	EEVKIT6-E-C
Single		1 box-Many boxes
Multiple	1 box (for master)	Many boxes(for slave)

EEV-Set Select from following 3 types according to the coil capacity.

Type	EEV6-71-E	EEV6-160-E	EEV6-280-E
Capacity	22-71	90-160	224-280

System configuration

- Single refrigeration system EEVKIT6-E-C ··· Possible with multiple refrigeration systems
- Multiple refrigeration system EEVKIT6-E-M (1) + EEVKIT6-E-C ··· Possible with multiple refrigeration systems(Max32)
- EEVKIT6-E-C is common for both single and multiple refrigeration systems

Single refrigerant system

- Single refrigeration system is the one that can have multiple outdoor units on one refrigerant pipe work circuit.
- There are 2 types of EEV-KIT systems that can be built into the single refrigeration system.
- System A : one EEV-KIT.
- System B : multiple EEV-KIT's.

System A

- This system has only one set of EEV-KIT built into one indoor unit with only one heat exchanger. This system can be applied to an indoor unit whose capacity is up to 10HP.

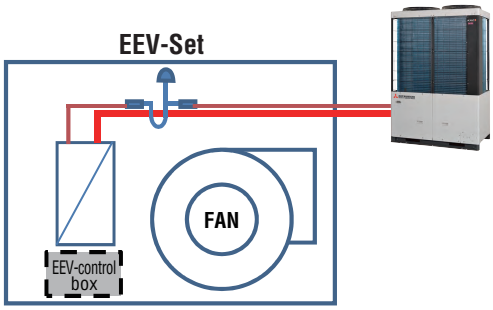

System B

- System B is a system that has multiple EEV-KIT's built into one indoor unit with multiple heat exchangers on one refrigerant circuit.
- This system can be applied up to 60HP (for KXZ) AHU capacity.

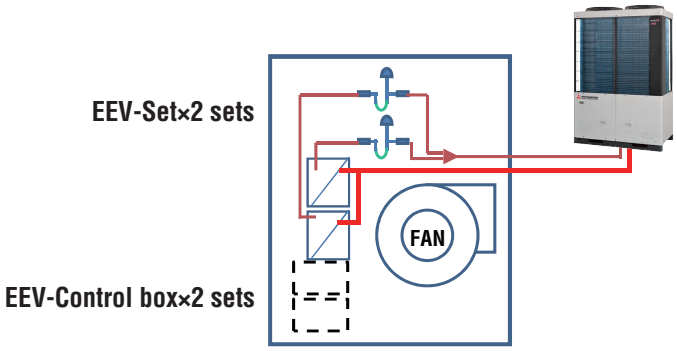

Multiple refrigerant system

Multiple refrigeration system is an AHU system with multiple independent refrigerant circuits and one master control to control the whole system.

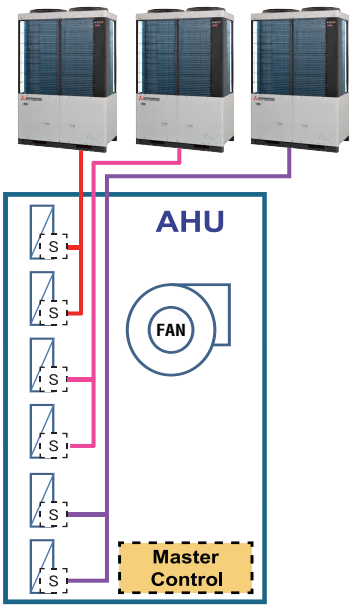

Advantages

- Large systems are possible [max capacity 896kW]
- External control
- Capacity step control
- Can connect to 32 units

Additional parts over a single refrigeration system

- One master control
- The slave EEV control and EEV set are the same as a single refrigeration system.

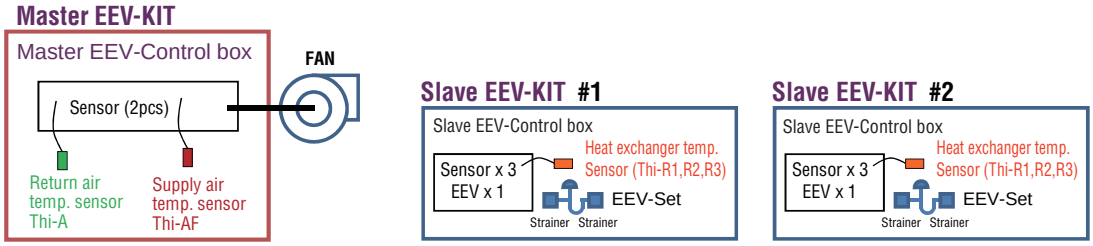

Connection to SUPERLINK II

Single refrigeration system

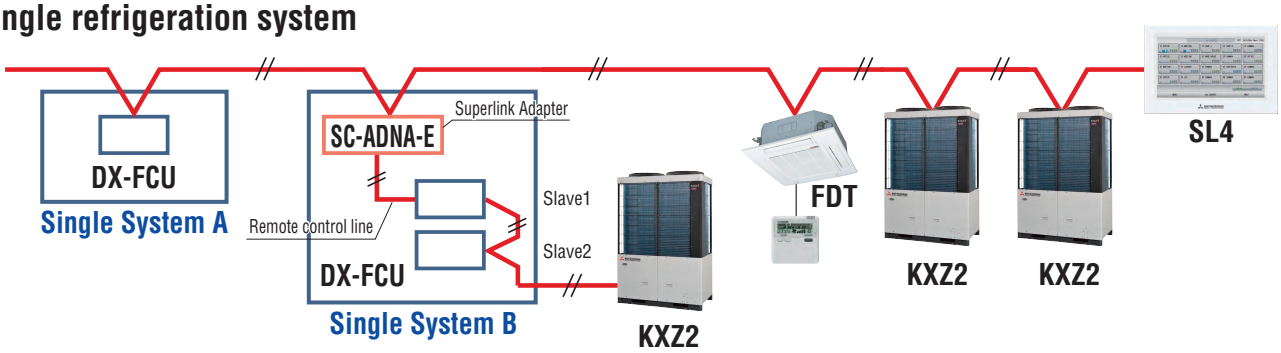

Multiple refrigeration system

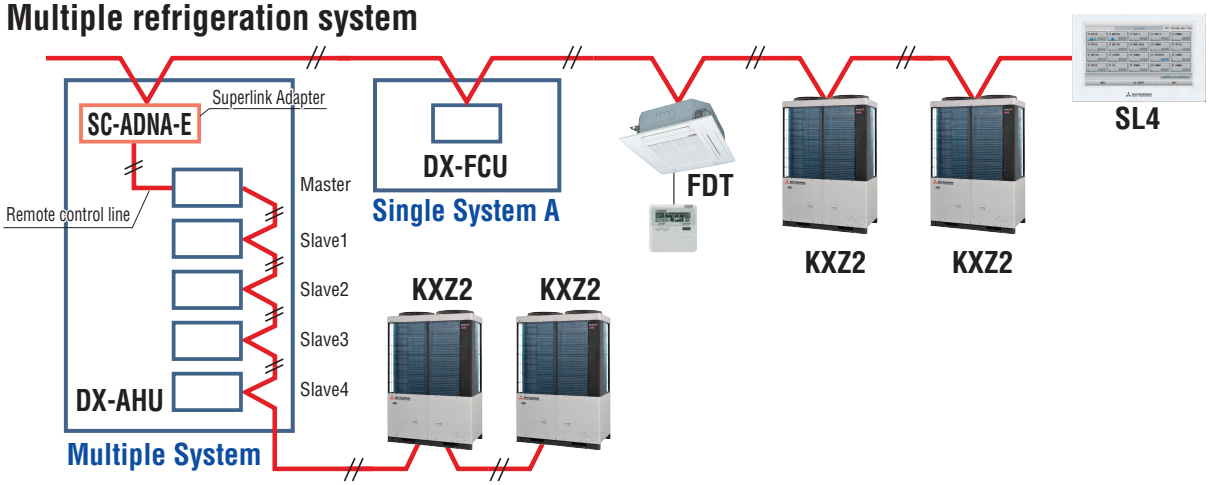

Control Systems

Individual control

Remote Control line up

	indoor unit	remote control
wired	all models	RC-EX3A
		RC-E5
		RCH-E3

	indoor unit	remote control	indoor unit	remote control	indoor unit	remote control
wireless	FDT	RCN-T-5BW(-5BB)-E2	FDTS	RCN-TS-E2	FDE	RCN-E-E3
	FDTC	RCN-TC-5AW-E3	FDK22~56	RCN-K-E2	FDFW	RCN-FW-E2
	FDTW	RCN-TW-E2	FDK71	RCN-K71-E2	others*	RCN-KIT4-E2

*FDTQ, FDU, FDUM, FDUT, FDUH, FDU-F

Wired remote control (option)

RC-EX3A

Intuitive touch controller with Liquid Crystal Display

User friendly

- LCD panel with light tap operation introduced as the industry's first
- Simple interface with only three buttons

Easy view

- Big LCD with 3.8 inch full dot display
- Back light function
- Multi language display (12 languages)

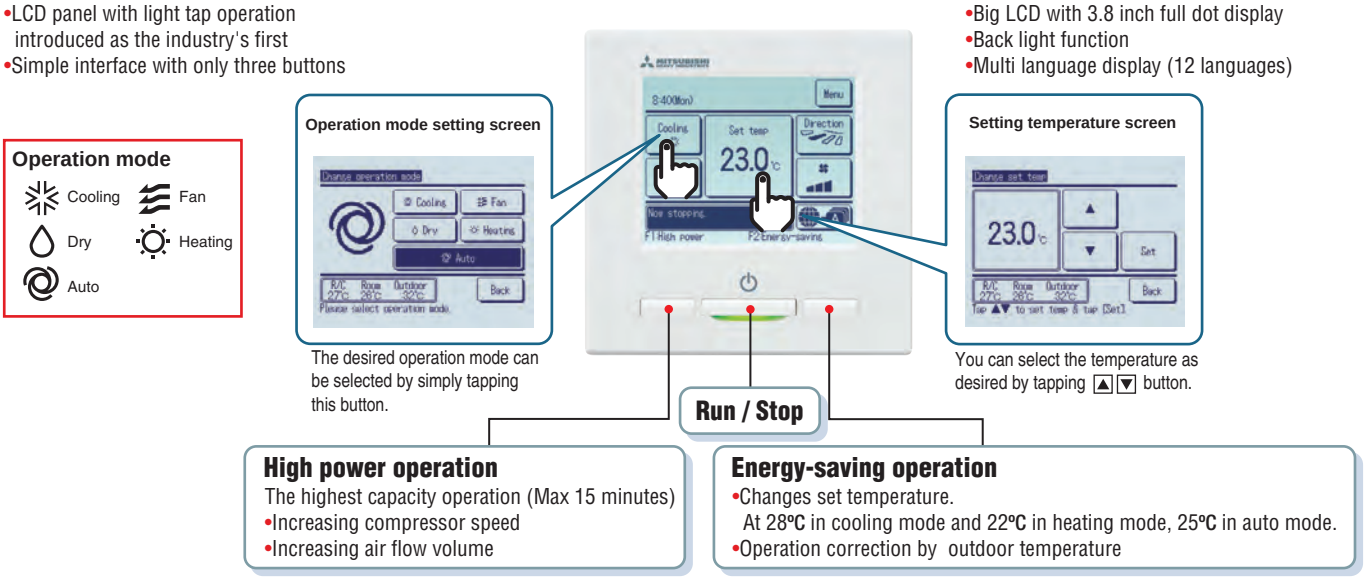

Main functions

	Function name	Description
Economy & Timer	Energy-saving operation	Since the capacity is controlled automatically based on the outdoor temperature, energy can be saved without losing comfort.
	Sleep timer	Set the time period from start to stop of operation. The selectable range of setting time is from 30 to 240 minutes (at 10-minuteintervals).
	Set temperature auto return	The temperature automatically returns to the previously set temperature.
	Set ON timer by hour	When the set time elapses, the air conditioner starts.
	Set OFF timer by hour	When the set time elapses, the air conditioner stops.
	Set ON timer by clock	The air conditioner starts at the set time.
	Set OFF timer by clock	The air conditioner stops at the set time.
	Weekly timer	On or Off timer can be set on a weekly basis.
	Peak-cut timer	Capacity control can be set by using peak cut function on RC-EX3A for better energy saving. Five-step capacity control is available.
	Home leave operation	When the unit is not used for a long period of time, the room temperature is maintained at a moderate level, avoiding extremely hot or cool temperatures.
Comfort	Big LCD & Touch screen panel	Large 3.8 inch screen has resulted in improved visibility and operability.
	Easy modification of Individual flap control	User can visually confirm and set the direction of flaps using the visual display on the remote controller.
	Automatic fan speed *1	The micro-computer automatically adjusts the airflow effectively to follow the changes of return air temperature.
	Temp increment setting	Temperature increment for the change of the set temp can be changed.
	Silent mode	Set the period of time to operate the Outdoor unit with prioritizing the quietness.
Convenience	Function switch	The function switch allows user to select and set two functions among available functions.
	Favorite setting	Operation mode, set temperature, fan speed and air flow direction automatically adjust to the programmed favorite setting.
	Adjusting Brightness of the background light	The brightness of the background light can be adjusted by 10 stages.
	LCD contrast setting	This function allows user to adjust LCD display contrast.
	High power operation	High Power Mode increases the unit operating ability for 15 minutes to quickly adjust the room temperature to a comfortable level.
	Back light setting	This convenient function allows user to see controls under low light conditions.
	Administrator settings	This function only allows specific individuals to operate the unit.
	Setting temp range	Limited range of setting temperature in the heating or the cooling operation can be selected.
	External Input/Output Function	The external input/output of indoor unit by remote controller can set input/output based on user needs.
	Select the language	Set the language to be displayed on the remote control.
Service	USB connection (mini-B)	This function allows batch input of schedule timer settings and other settings involving a large amount of data.
	Error code display	This function allows user to check information displayed when abnormal function of the unit occurs.
	Operation data display	Displays various types of air conditioner operation data in real time.
	Contact company display	Address of the service contact is displayed.
	Filter sign	Announces the due time for cleaning of the air filter.
	Static pressure adjustment	Allows user to adjust duct static pressure using the remote control.
	Backup Control	Allows for rotation control, fault backup control, and capacity backup control.

*1 Cannot be used when a centralized control remote is connected.

Wireless remote control (option)

For wireless control simply insert the infra-red receiver kit on a corner of the panel

RCN-T-5BW-E2
RCN-T-5BB-E2

RCN-TC-5AW-E3

RCN-TW-E2

RCN-TS-E2

RCN-K-E2,
RCN-K71-E2

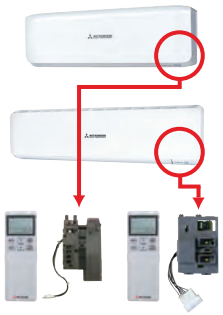

RCN-E-E3

RCN-FW-E2

RCN-KIT4-E2

*The wireless remote control is not applicable to the Individual flap control system.

Wired remote control (option)

RC-E5

The RC-E5 controller enables extensive access to service and maintenance technical data combined with easy to use functions and a clear LCD display.

Weekly timer function as standard

RC-E5 provides (as a standard feature) a weekly timer, which allows one-week operation schedules to be registered. A user can specify up to four times a day to start/stop the air conditioner. (Temperature setting is also possible with the timer).

Timer operation

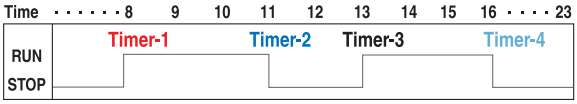

Run hour meters to facilitate maintenance checking

RC-E5 stores operation data when an anomaly occurs and indicates the error on the LCD. It also displays cumulative operation hours of the air conditioner and compressor since commissioning.

Room temperature controlled by the remote control sensor

The temperature sensor is housed in the top section of the remote control unit. This arrangement has improved the sensitivity of the remote control unit's sensor, which permits more finely controlled air conditioning.

Changeable set temperature ranges

RC-E5 allows the upper and lower limits of a set temperature range to be specified separately.
By adjusting a set temperature range, you can ensure energy saving air conditioning by avoiding excessive cooling or heating.

	Changeable range
Upper limit	20~30ºC(effective for heating operation)
Lower limit	18~26ºC(effective for non-heating operation)

Simple remote control (option)

RCH-E3 (wired)

Designed specially for hotel rooms, the controller's buttons are limited only to the minimum required functions such as ON/OFF, mode, temperature setting and fan speed. It is really simple and easy to use.

Up to 16 units

It can control up to 16 indoor units, by pressing the AIR CON No. button.

AUTO restart

This function allows starting the air conditioner automatically when power supply is restored after power failure or by turning on the power switch.

*RCH-E3 is not applicable to the Individual flap control system.
*When RCH-E3 is used, the fan speed setting can only be set to 3 speed settings (Hi-Me-Lo).

Thermistor (option)

SC-THB-E3

In case the sensor integrated in the indoor unit or in the remote controller is unable to sense the room temperature correctly, or an individual controller in each room is not required but a temperature sensor is (as when a central control system is in place), install SC-THB-E3 in an adequate location in the room.

8m

SUPERLINK®- Ⅱ Control System

Mitsubishi Heavy Industries Thermal Systems has now combined simplicity of installation with our highly sophisticated SUPERLINK - Ⅱ control system, to offer building owners and occupiers a comprehensive control and management system, while providing complete commissioning and service maintenance assistance for installers and service engineers. SUPERLINK - Ⅱ network utilises two wire, non-polar cable - for further details of wiring. SUPERLINK - Ⅱ is an advanced high speed data transmission system that can connect up to 128 indoor units and 32 outdoor units as a network. Mitsubishi Heavy Industries Thermal Systems offers a wide range of control options for the SUPERLINK - Ⅱ network to suit any application large or small, as well as connection to new or existing building management systems. Individual Mitsubishi Heavy Industries Thermal Systems split systems can also be integrated on to the SUPERLINK - Ⅱ network using SC-ADNA-E.

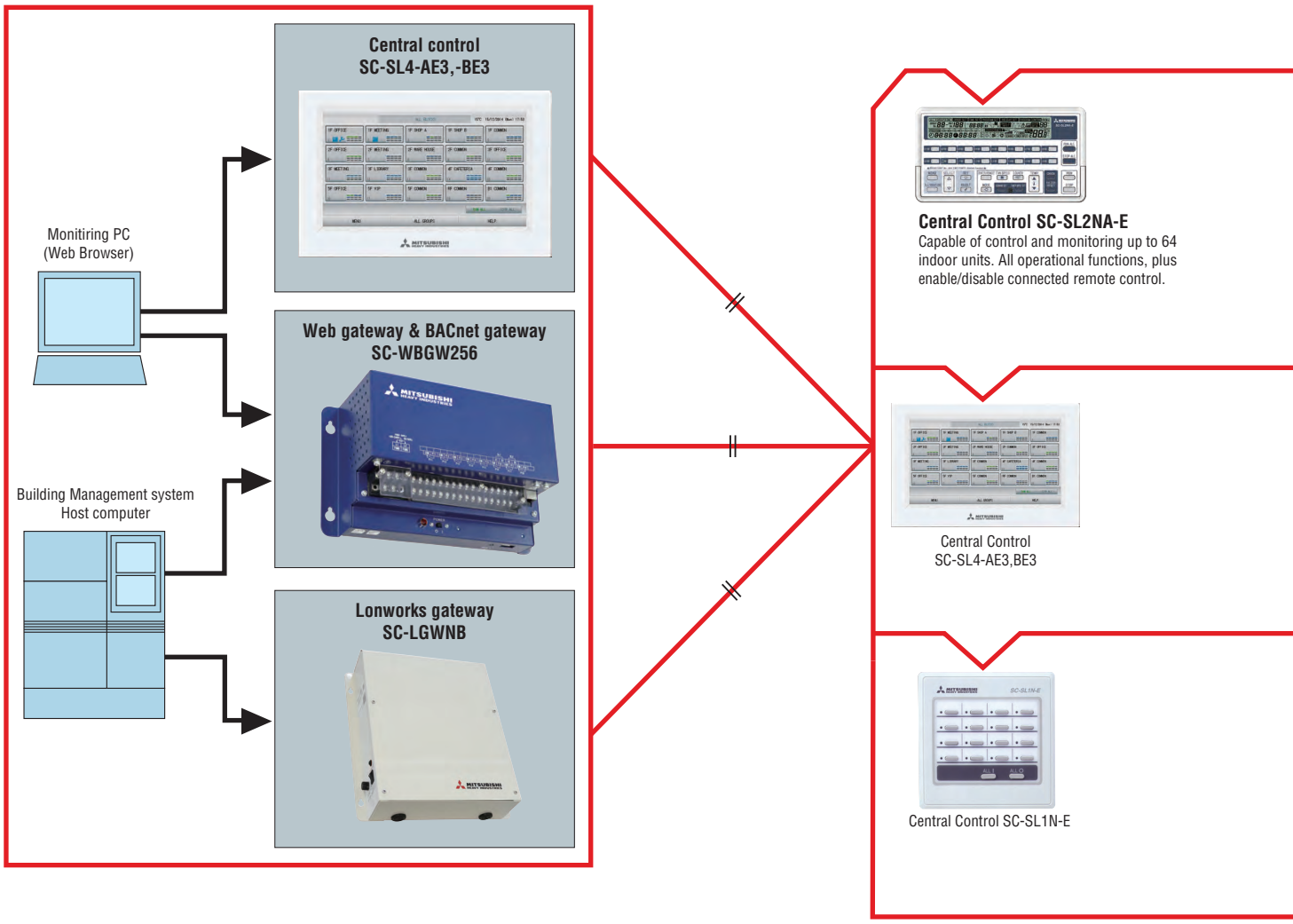

SUPERLINK E BOARD(SC-ADNA-E)

This board is used when conducting control of the single package (wired remote control unit) 1-type series using a network option.

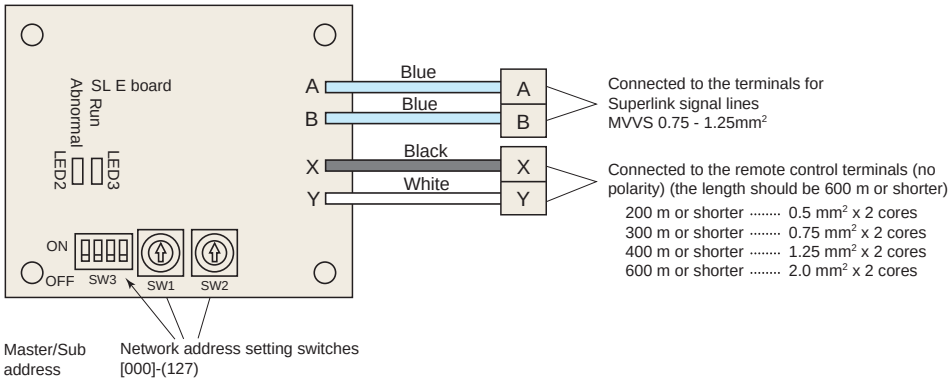

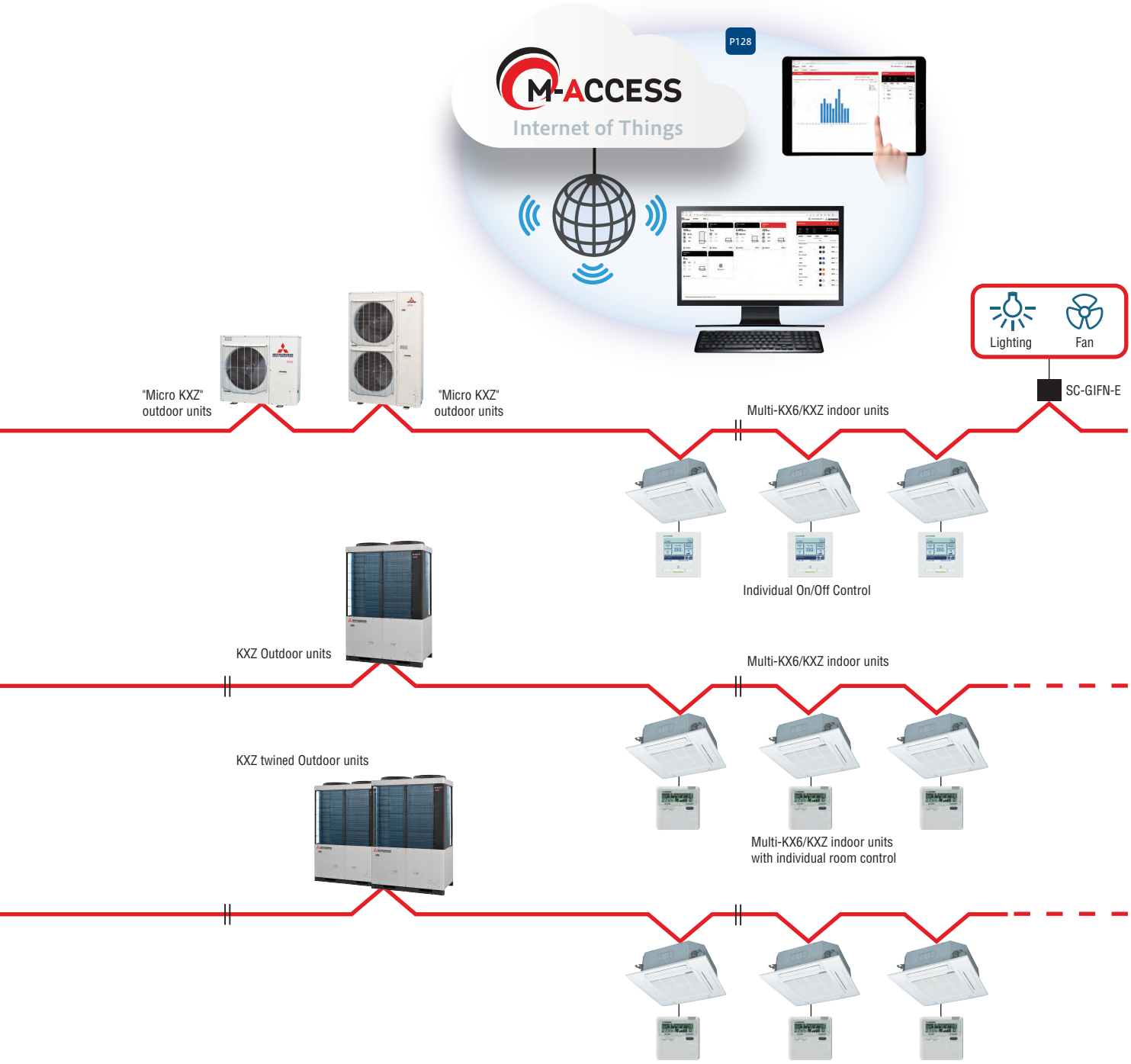
P128
M-ACCESS
Internet of Things
Lighting
Fan
SC-GIFN-E
"Micro KXZ" outdoor units
"Micro KXZ" outdoor units
Multi-KX6/KXZ indoor units
Individual On/Off Control
KXZ Outdoor units
Multi-KX6/KXZ indoor units
KXZ twined Outdoor units
Multi-KX6/KXZ indoor units with individual room control

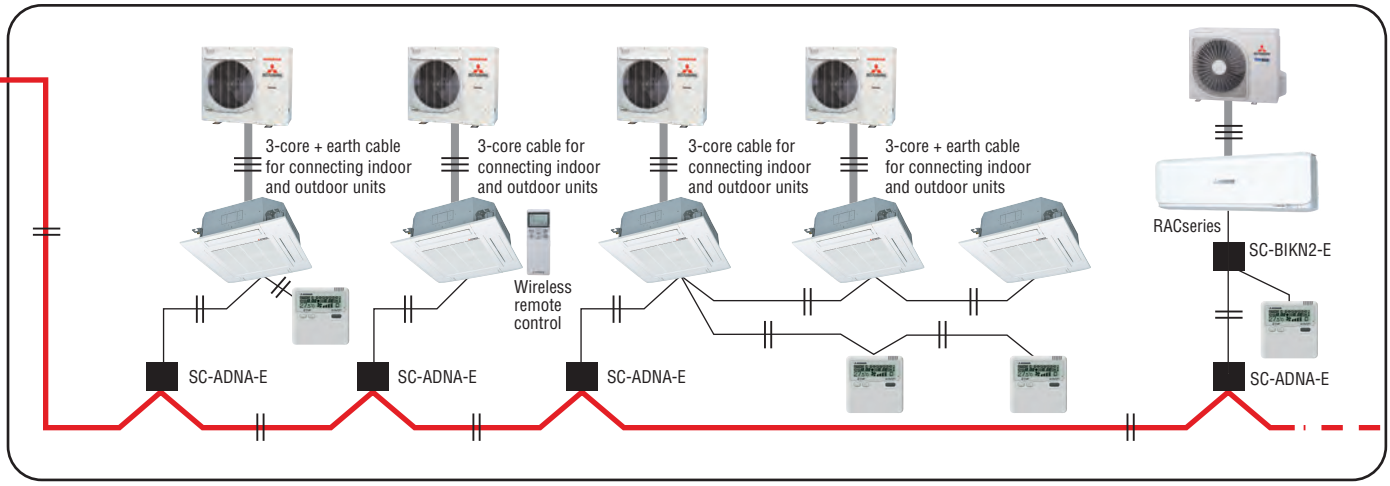
3-core + earth cable for connecting indoor and outdoor units
3-core cable for connecting indoor and outdoor units
3-core cable for connecting indoor and outdoor units
3-core + earth cable for connecting indoor and outdoor units
Wireless remote control
RACseries
SC-BIKN2-E
SC-ADNA-E
SC-ADNA-E
SC-ADNA-E
SC-ADNA-E

IoT Remote monitoring system

The Cloud system M-access can remotely control the air conditioning units by using Iot technology.
With 3 different functions the system supports the operation and management from both the software and hardware.

RM-CGW-E1
H140 × W260 × D93mm

1 Diverse connectivity

The system could be connected to a wide range of units.

2 Could monitor and control the units in various locations

Could monitor the conditions of the air conditioning units in remote locations in real time.

3 Error notifications

When detecting malfunction an alert is sent to the user by E-mail. Could register multiple users for the sending address.

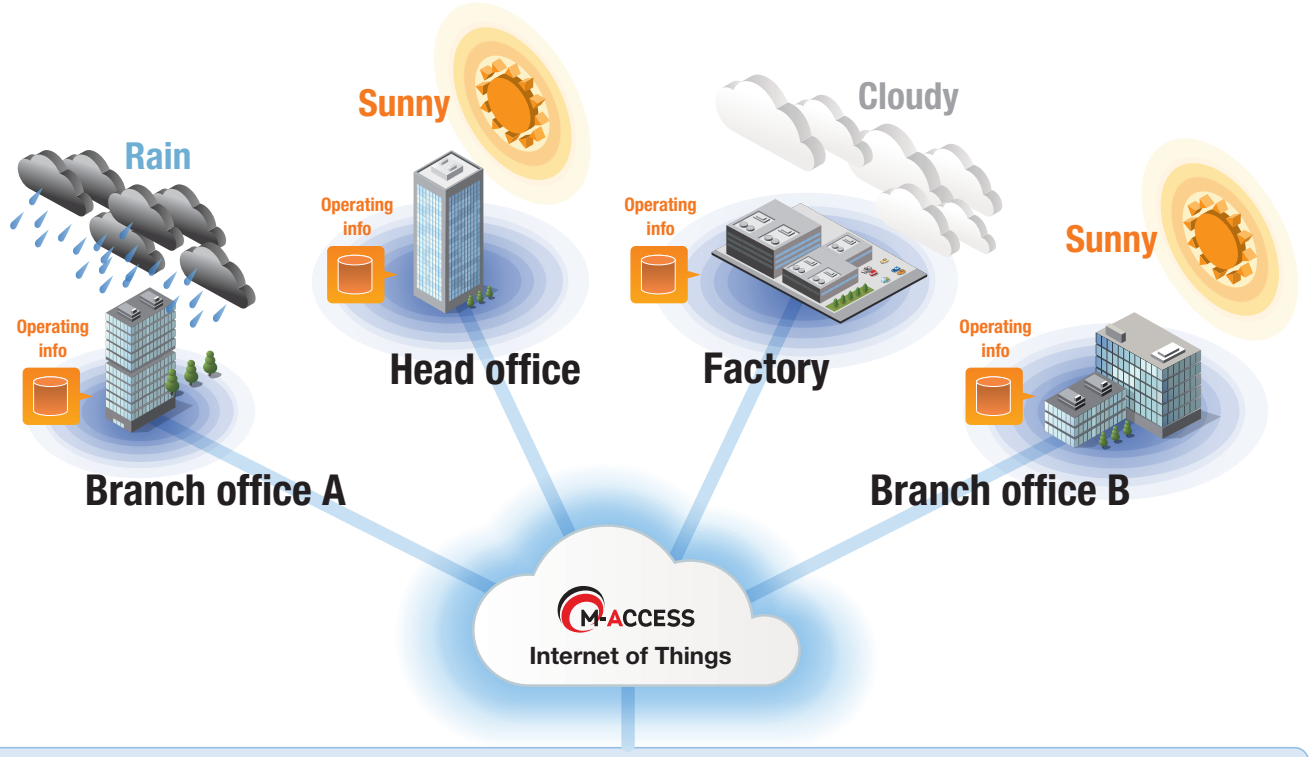

From PC and tablets

The photos of the devices are an image

1 Diverse connectivity

By monitoring the operating conditions of the air conditioning units M-ACCESS supports the total management of offices.

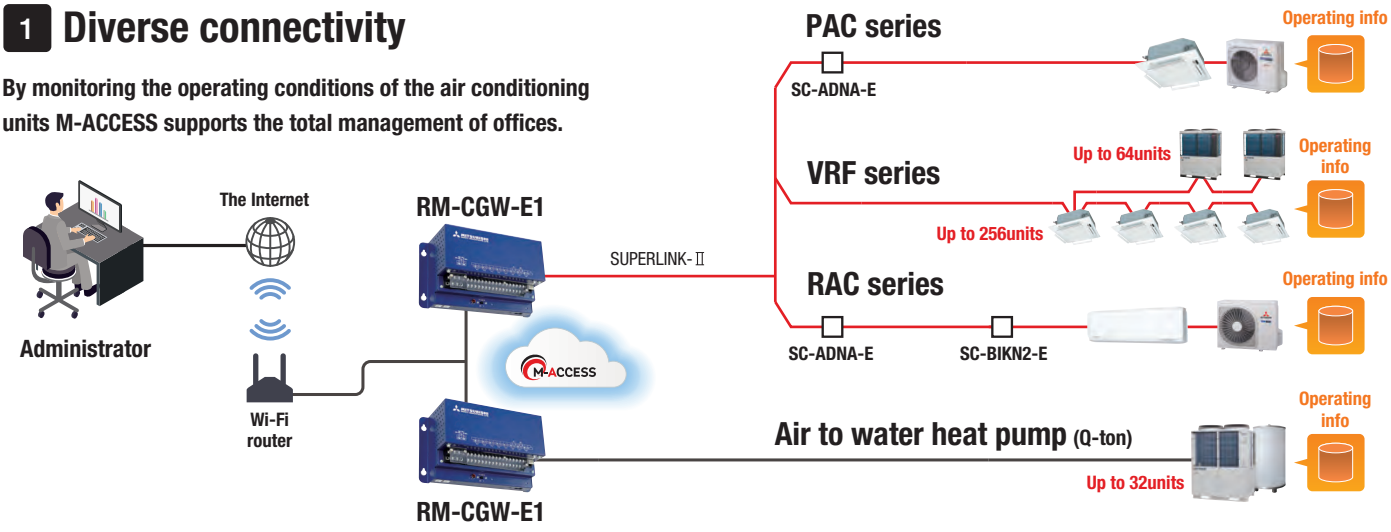

2 Could monitor and control the units in various locations

Could know the real time operating conditions of the units in different locations.
Could simultaneously manage up to 128 different locations.

Example controlling 5 different locations with one device

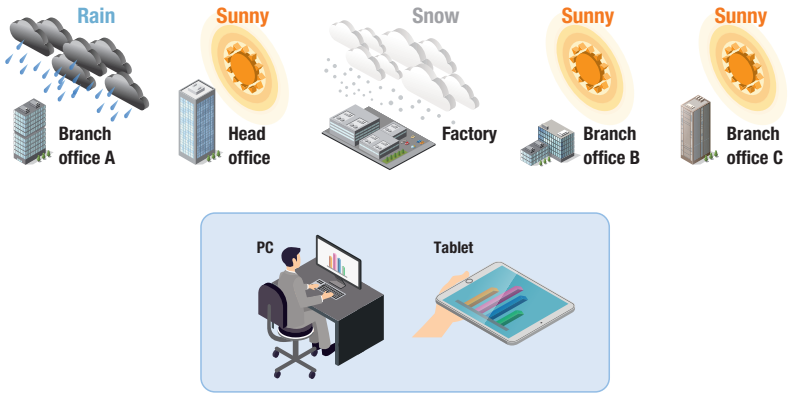

1 Improving the operation and making the life cycle of units better

Could remotely activate/deactivate or change the setting temperature by looking at the weather conditions of various locations.

2 Making Efficient operation possible with connection to the various units

Operating the units with optimized combination

Could connect to VRFs, Packaged inverter units and Residential AC.

3 Error notifications

Malfunction in the unit

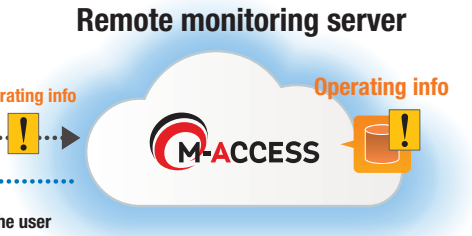

User A

User B

1. When detecting malfunction an alert is sent to the user by E-mail.
2. Could register multiple users as the sending address.
3. Could auto send the E-mail to the maintenance company. (Could register up to 100 address)

Alert E-mail

- Building name
- Unit with malfunction
- Error codes

Central Control
SC-SL4-AE3,BE3

Mitsubishi Heavy Industries Thermal Systems introduces the full colour touch screen central control SC-SL4-AE3,BE3, with 9 inch interactive LCD display. Offers control, monitoring, scheduling and service/maintenance functions for up to 128 indoor units.
Control with PC is available by use of Microsoft Edge/Google chrome.

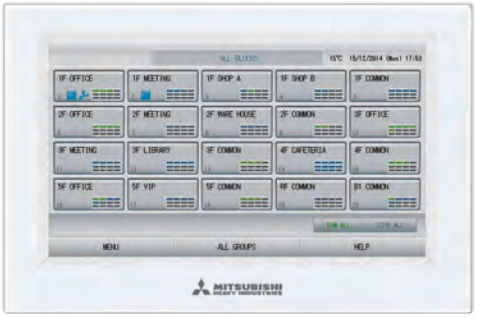

Indoor units can be controlled, scheduled, monitored and either individually, as groups or as blocks of groups with the following functions:

Control	Monitoring	Scheduling	Administration/Service
Run/Stop / Home leave	Operating state	Yearly schedule	Block definition, Floor layout
Mode (cool/heat/fan/dry/Auto)	Mode	Today's schedule	Group definition
Set temperature	Set temperature	Detailed daily schedule	Unit definition
Operation permitted/prohibited	Room temperature	Season setting	Time and date setting
Fan speeds	Operation permitted/ prohibited		Alarm history
Air direction	Fan speed		Energy consumption calculation period
Filter sign reset	Air direction		Energy consumption, cumulative operation time
Demand control (3 steps)	Filter sign		Flap control setting
Emergency stop	Maintenance (1, 2 or back-up) Outdoor air temperature		Operation data monitoring Data logging (Run / Stop set temperature , room temperature , outdoor air temperature)

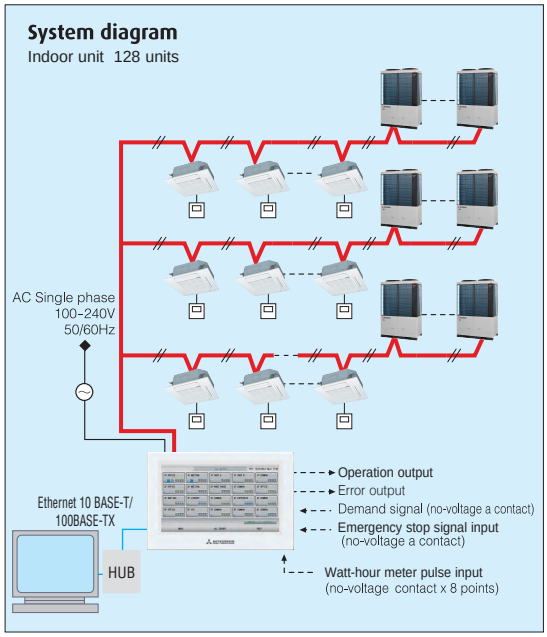

PC requirements: Windows 10, Windows 11
Monitor resolution 1280 x 1024 or more.
Web browser requirements: Microsoft Edge , Google Chrome

Schedule setting

For each group
Schedule settings for each group are possible. The RUN/STOP/HOME LEAVE time, operation mode, remote control Lock/Unlock setting, temperature setting, energy setting, and silent mode can be set up to 16 times per day.

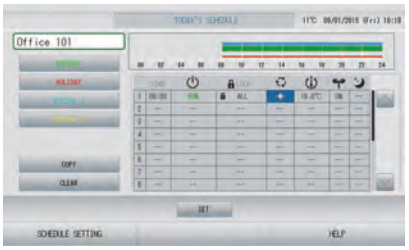

Yearly Schedule
Schedule settings for a year are also possible. The weekday, holiday, special day 1 or special day 2 can be selected and set.
Able to automatically update the yearly schedule.

Operation time history

Possible to check operation time history for cooling and heating separately.

Alarm history

A maximum of 300 records is displayed for the history of error occurrence and restoration in the unit of air conditioner.
It is possible to output the history data to a CSV data file.

Maintenance code

Able to show the maintenance code

Improved visibility

Compared to the old model the visible angle of the LCD has expanded and the visibility has improved.

High visibility

Increase in size from 7 to 9 inches

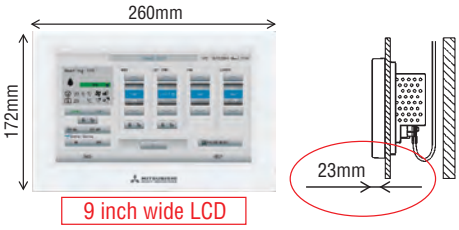

Contrast between five colours for icon display and black light base screen has achieved high visibility.

Models that can be connected has increased

Can now connect to Q-ton/ HMU. Can have easy centralized control over various modes

*When connecting to Q-ton, an interface(RCI-MDQE2) is necessary.

Block layout function

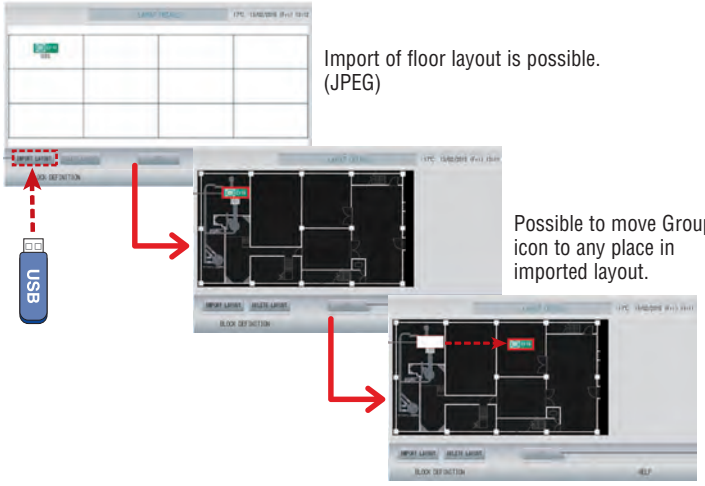

Import of floor layout is possible. (JPEG)

Possible to move Group icon to any place in imported layout.

Web function

You can monitor and control up to 128 indoor units (Max.128 groups) from a PC or tablet PC.

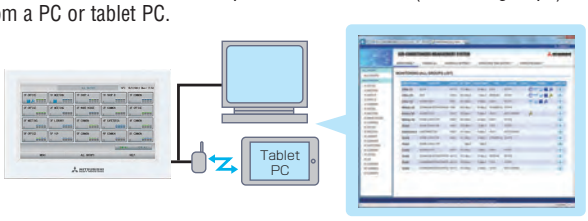

<Example>
Monitoring and operating air conditioners in a lecture room of a university

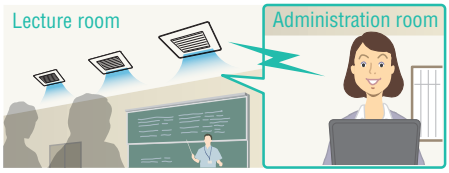

New demand control function

With the new demand control, temperature shifts between 1~9℃(Cooling or Drying ;1~9℃, Heating: -1~-9℃),fan mode can be selected.

■ Image of demand control for temperature shifts and air flow

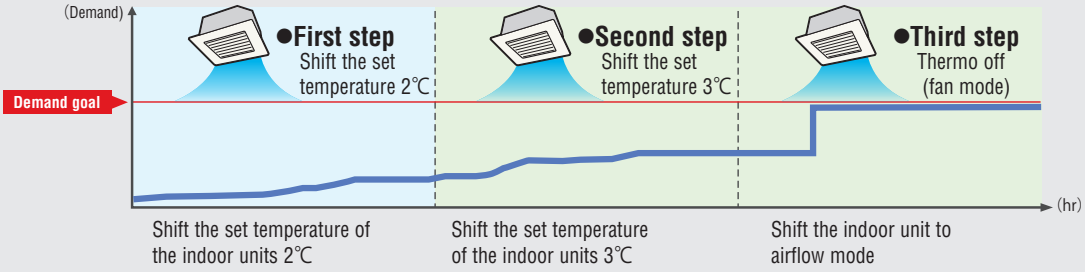

Electric power calculation function:

(for SC-SL4-BE3 only)

SC-SL4-BE3 gives electric power consumption data (kWh) for each indoor unit, each group, each SUPERLINK-Ⅱ system, and each watt-hour meter input.

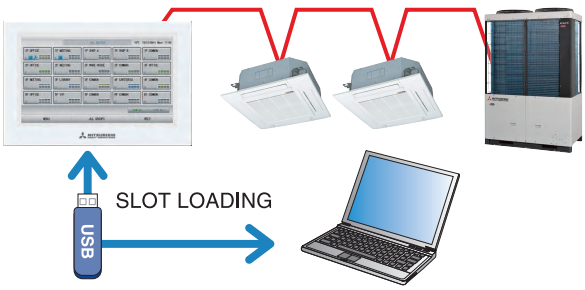

	SC-SL4-BE3
Export data by	USB / LAN
Calculation software	Included
Watt-hour meter pulse input (Maximum)	8
Max connectable indoor units	128

Item / Model		SC-SL4-AE3/SC-SL4-BE3
Ambient temperature during use		0 ~ 40°C
Power supply		1 Phase 100-240V 50/60Hz
Power consumption		9W
External dimensions (Height x Width x Depth)		172mm x 260mm x 23 (+70) mm
Net weight		2.0kg
Number of connectable units (indoor units)		up to 128 units
LCD touch panel		Colour LCD, 9 inches wide
Inputs	SL (Superlink) signal inputs	1 system (Super link-Ⅱ)
	Watt-hour meter pulse input*	8-point, pulse width 80ms or more
	Emergency stop signal input*	1 point, non-voltage a contact input continuous input (closed, forced stop)
	Demand signal input*	2 point, non-voltage a contact input continuous input (closed, demand control)
Outputs	Operation output	1 point, maximum rated current 40mA, DC24 V All units stop; Open, any unit operating;Close
	Error output	1 point maximum rated current 40mA, DC24 V Normal; closed. If even one unit is abnormal; Open (Open/closed can be changed)

* The receiving side power supply is DC 12V (10mA).
The air conditioning charges calculations of this unit are not based on OIML, the international standard.

SC-SL1N-E

Start/stop control of up to 16 indoor units either individually or collectively.

Simple centralised control.

1. The SC-SL1N-E is connected to the Superlink-Ⅱ network via 2-core, non-polar wires ('AB' connection).
2. It will monitor and control the start/stop function of up to 16 units, with the sixteen operation button.
3. The unit or group numbers in operation or in need of service are displayed with an LED.
4. Collective start/stop is also available through the simultaneous on/off button.
5. Up to 12 SC-SL1N-E units can be connected to a Superlink-Ⅱ network (consisting of up to 128 indoor units).
6. If a power failure occurs, the SC-SL1N-E will resume the operation of the system according to a stored operation condition, once power is restored.

SC-SL2NA-E

Central control of up to 64 indoor units including weekly timer function as standard.

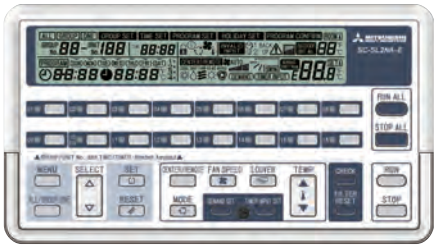

1. The SC-SL2NA-E is connected to the Superlink-Ⅱ network via 2-core, non-polar wires ('AB' connection).
2. It will monitor and control the start/stop function of up to16 units, or 16 groups of units, with the sixteen operation buttons.
3. It also monitors and controls the following functions for individual units, groups of units or the complete network: operation mode, set point temperature, return air temperature, louvre position, error code. Air flow and center lock function.
4. The unit or group numbers in operation or in need of service are displayed with an LCD.
5. Collective start/stop is also available through the simultaneous on/off button.
6. If a power failure occurs, the SC-SL2NA-E will resume the operation of the system according to a stored operation condition, once power is restored.
7. The SC-SL2NA-E can be connected to an external timer to facilitate timed on/off cycles.

Example of control by a center control SC-SL2NA-E

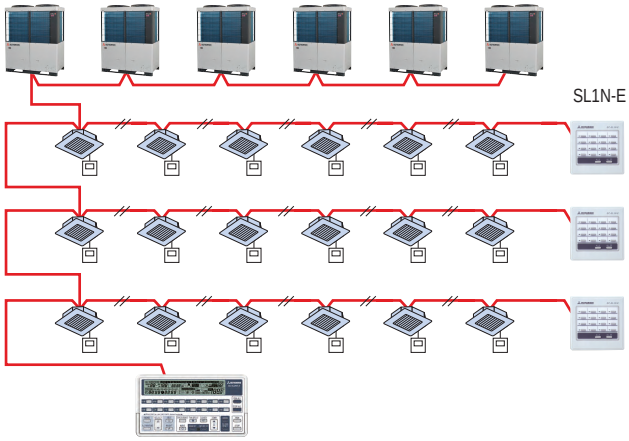

An SC-SL2NA-E performs the start/stop control, monitoring and mode setting of up to 64 units. It is a high quality air conditioner control system that allows up to 64 indoor units to be freely grouped into 1 to 16 groups.
It allows not only the start/stop control but also the monitoring, display of operation statuses such as in operation or in need of service and mode setting such as switching of operation modes of connected units collectively, by group or individually.
• Outer dimensions: H120 x W215 x D25+35*mm.
35* is the measurement including the part contained in a recess.

SC-GIFN-E Interface kit

• Applicable products
Ventilation fan, Air purifier
• By using SC-GIFN-E together with central control such as SC-SL1N-E, SC-SL2NA-E and SC-SL4-AE3,-BE3, you can start-stop, operate & monitor the operation of applicable products.

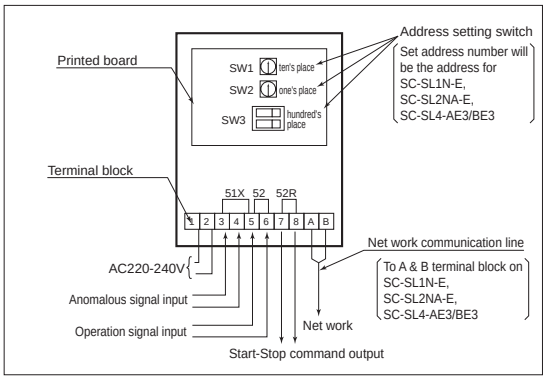

Note:Please consult dealer for combination of center controls and Building Management Systems interface units.

Building Management Systems
SC-WBGW256 (Web gateway+BACnet gateway)

Production by order

SC-WBGW256 controls and monitors of up to 256 cells (some cells can have two or more indoor units and total number of indoor units can be up to 256 units) centralised to a network PC using the Superlink-Ⅱ web gateway. Simple installation is assured with no special software requirements, operation is via web browser.
A low power embedded CPU and compact flash ROM ensure a large storage capacity with high reliability (no moving parts such as a PC fan, etc). An IP address filter function combined with three-level user authentication check also ensures security.
Also, SC-WBGW256 can be used as interface devices that convert Mitsubishi Heavy Industries Superlink-Ⅱ communication data to BACnet code and are controlled centrally from a building management system.

[In case of web gateway]

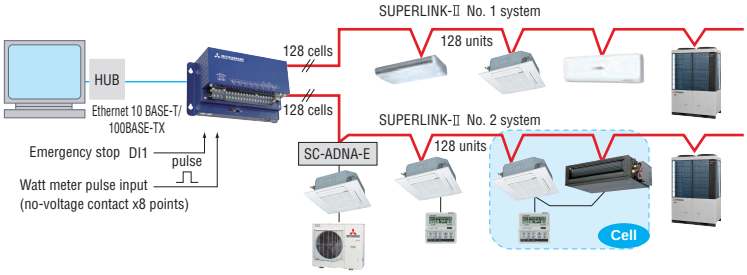

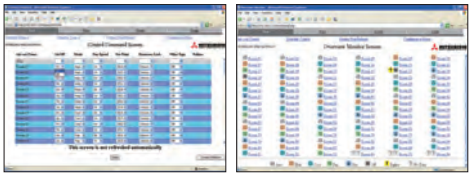

PC requirements: Windows 7 or Windows 8.1.
Monitor resolution 1364 x 768.

Users can manage up to 1024 units by connecting the four devices!!

[In case of BACnet gateway]

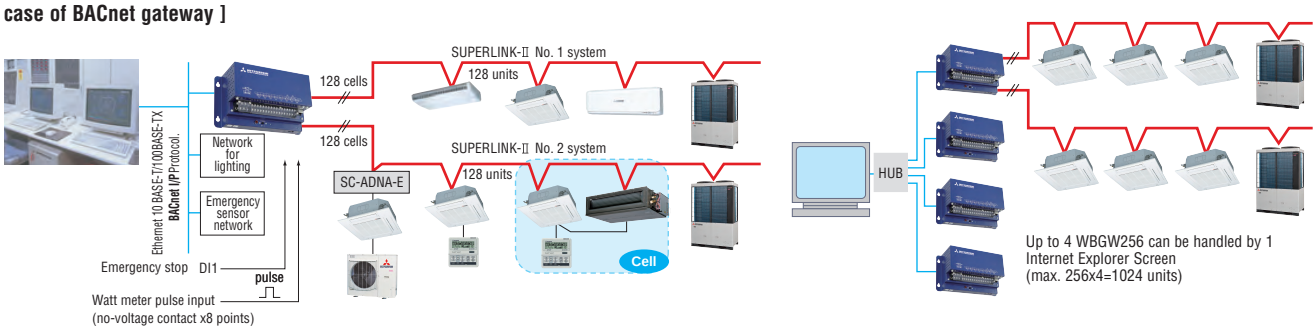

SC-LGWNB (LonWorks gateway)

Production by order

SC-LGWNB is an interface device that converts Mitsubishi Heavy Industries Superlink-Ⅱ communication data to LonWorks code. Control and monitoring functions of the a/c system for up to 96 indoor units can be integrated to a central control point via the building management system network.

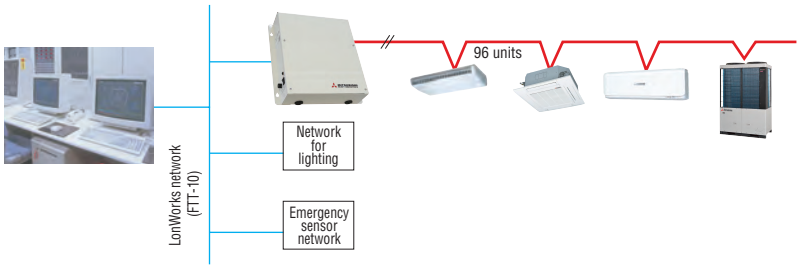

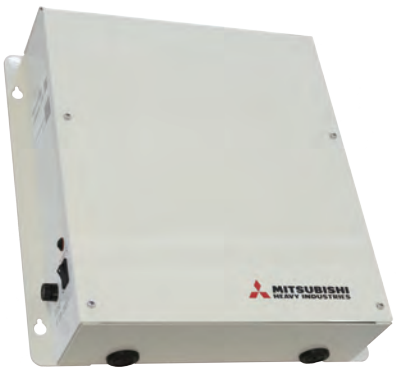

Additional engineering service cost etc. is required.
Please consult your dealer when using this gateway.

INTESIS BMS Interface for Mitsubishi Heavy Industries Thermal Systems Air Conditioners

All technical support, including specifying work, compatibility issues, product quality (repair and replacement issues), product liability issues and the required after sales service (including spare parts supply) will be provided by Intesis as it is an Intesis product.
Product sales and delivery will be conducted by Intesis as well.
For details concerning such matters please directly contact Intesis.

Integration of Mitsubishi Heavy Industries Thermal Systems VRF in your KNX installation by Superlink

INKNXMHI048O000
(Max 48 indoor units / Superlink I & II)
INKNXMHI128O000
(Max 128 indoor units / Superlink II)

INTEGRATED GATEWAY

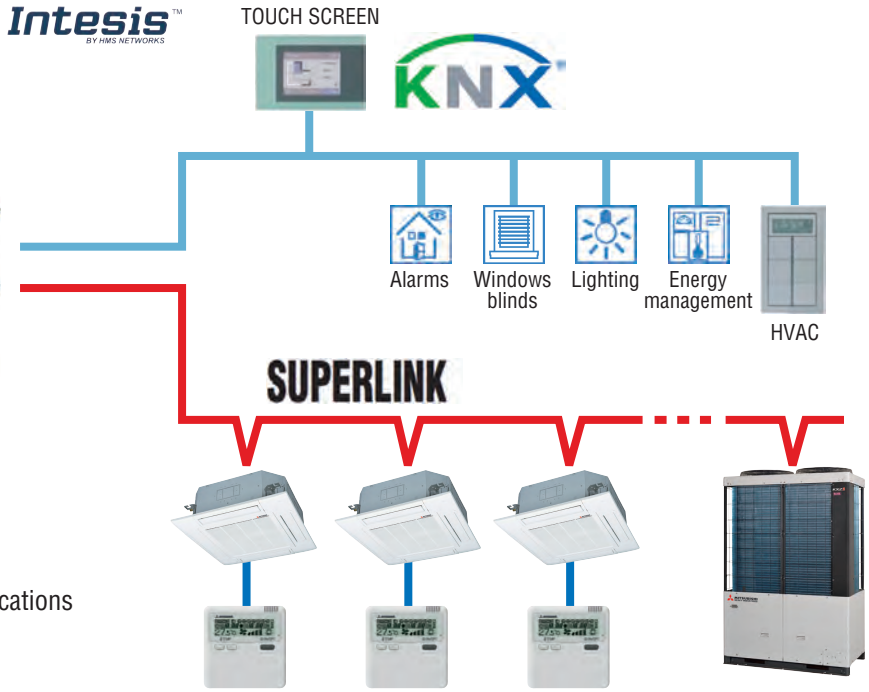

- Bidirectional: Supervision and Control
- Robust and reliable hardware
- Direct connection to KNX TP-1 BUS
- Independent management of communications
- Power supply: 230 VAC 50/60Hz
- Wall mounting case

Integration of Mitsubishi Heavy Industries Thermal Systems VRF in your Modbus installation by Superlink

INMBSMHI048O000
(Max 48 indoor units / Superlink I & II)
INMBSMHI128O000
(Max 128 indoor units / Superlink II)

INTEGRATED GATEWAY

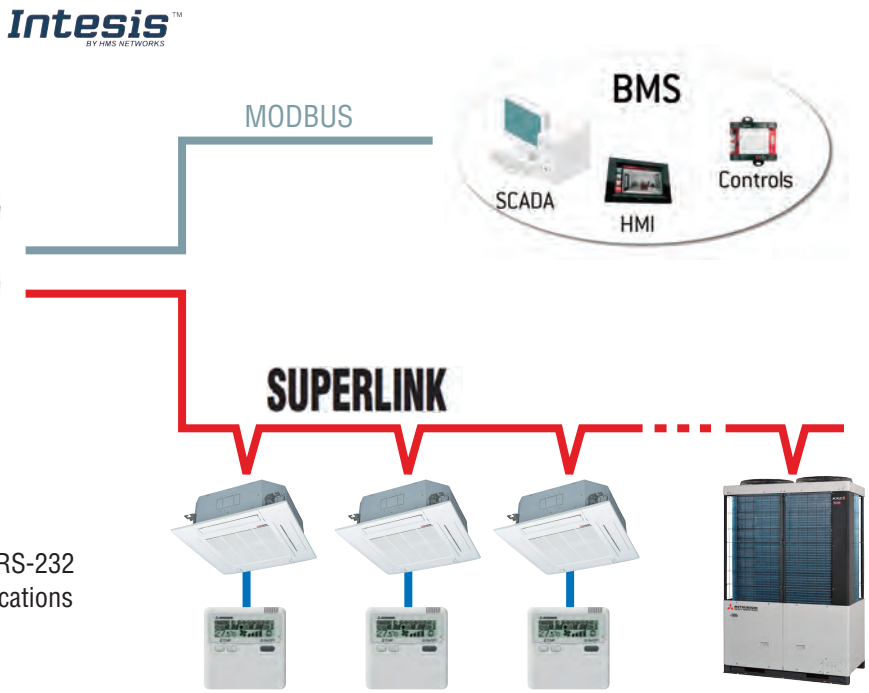

- Bidirectional: Supervision and Control
- Robust and reliable hardware
- Modbus TCP or Modbus RTU RS-485/RS-232
- Independent management of communications
- Power supply: 230 VAC 50/60Hz
- Wall mounting case

Integration of Mitsubishi Heavy Industries Thermal Systems PAC in your KNX installation by Remote control line

INKNXMHI001R000

Intesis™ BY HMS NETWORKS

- Protocol : KNX TP-1 bus
- Dimension : 71 x 71 x 27 mm
- External Power supply : no need

Example :
Device as Master

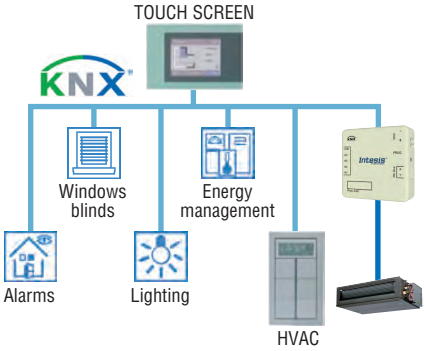

Example :
Device as Slave

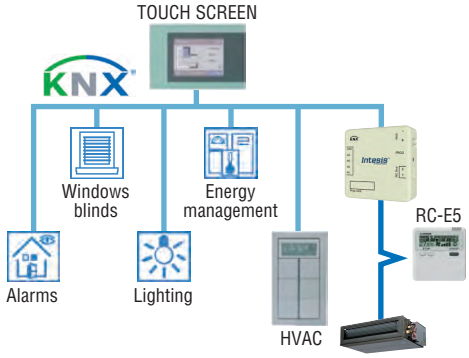

Integration of Mitsubishi Heavy Industries Thermal Systems PAC in your Modbus installation by Remote control line

INMBSMHI001R000

Intesis™ BY HMS NETWORKS

- Protocol : Modbus RTU (RS-485)
- Dimension : 93 x 53 x 58 mm
- External Power supply : no need

Example :
Device as Master

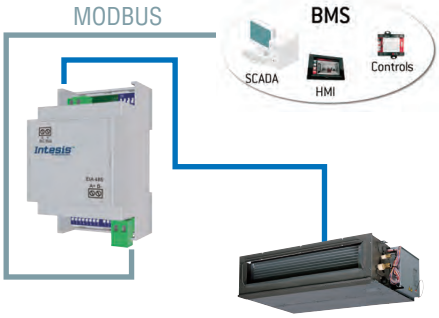

Example :
Device as Slave

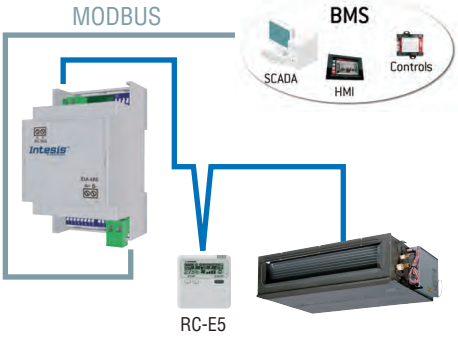

AC Cloud Control

PAC Model: INWMPMHI001R000

Please access the followings for details.

Intesis™ BY HMS NETWORKS

URL http://www.intesis.com
email info@intesis.com

Energy efficient and environmentally conscious

Several radical design changes and engineering developments have brought about a vast improvement in energy efficiency and environmental protection.

SEER and SCOP is defined in European regulations listed below.

No.2016/228 1: requirement for air-heating products, cooling products, high temperature process chillers and fan coil units.Seasonal efficiency is the new way of rating the true efficiency of heating and cooling products over an entire year. Set by the EU's new regulation implementing Eco-Design Directive for Energy related Product (ErP) which specifies the minimum efficiency of air conditioners manufacturers must integrate into their products.

The new Seasonal Efficiency rating system that must be used for heating and cooling by all manufacturers are;

SEER - Seasonal Efficiency Ratio (value in cooling)
This ratio represents the annual cooling performance divided by the annual consumption of electricity for cooling.

SCOP - Seasonal Coefficient of Performance (value in heating)
This ratio is calculated as the divided reference annual heating performance by the annual consumption of electricity for heating.

All models meet the performance required by LOT6/21.

RoHS:Restriction of Hazardous substances

In order to avoid the release of hazardous substances into the environment, all models have utilized lead-free solder application. It has been considered to be difficult to use lead-free solder for practical applications because it requires higher solder temperatures at assembly, which can jeopardize reliability. However our PbF soldering method can produce a higher quality lead-free printed circuit board.

Employment of R32 R410A

All models use refrigerant R32 or R410A characterized by the ozone depletion coefficient being 0.

Excellent Energy Saving

High performance and excellent energy savings are achieved at the same time by the increased capacity of the heat exchanger and employment of high efficiency DC motor.

Outdoor unit	FDC121KXZEN1 -W	FDC121KXZES1 -W	FDC140KXZEN1 -W	FDC140KXZES1 -W	FDC155KXZEN1 -W	FDC155KXZES1 -W
SEER / SCOP (Outdoor unit)	9.67 / 4.67	9.67 / 4.67	8.82 / 4.62	8.82 / 4.62	8.17 / 4.58	8.17 / 4.58

Outdoor unit	FDC121KXZEN1	FDC121KXZES1	FDC140KXZEN1	FDC140KXZES1	FDC155KXZEN1	FDC155KXZES1
SEER / SCOP (Outdoor unit)	8.15 / 4.63	8.15 / 4.63	7.73 / 4.59	7.73 / 4.59	7.21 / 4.55	7.21 / 4.55

Outdoor unit	FDC224KXZME1	FDC280KXZME1	FDC335KXZME1A	FDC224KXZPE1	FDC280KXZPE1
SEER / SCOP (Outdoor unit)	6.55 / 4.55	6.03 / 4.54	5.84 / 4.04	6.65 / 4.34	6.68 / 4.50

Outdoor unit	FDC280KXZE2	FDC335KXZE2	FDC400KXZE2	FDC450KXZE2	FDC475KXZE2	FDC500KXZE2	FDC560KXZE2
SEER / SCOP (Outdoor unit)	7.30 / 4.88	7.54 / 4.68	7.12 / 4.87	7.01 / 4.36	6.84 / 4.45	7.29 / 4.58	6.73 / 4.30

Outdoor unit	FDC224KXZRE2	FDC280KXZRE2	FDC335KXZRE2	FDC400KXZRE2	FDC450KXZRE2	FDC475KXZRE2	FDC500KXZRE2
SEER / SCOP (Outdoor unit)	6.21 / 4.06	6.36 / 4.02	7.15 / 4.43	6.78 / 4.39	6.29 / 4.33	6.60 / 4.27	7.01 / 4.39

Outdoor unit	FDC560KXZRE2	FDC615KXZRE2	FDC670KXZRE2
SEER / SCOP (Outdoor unit)	6.26 / 4.29	6.05 / 4.34	5.88 / 4.50

・refrigerant contained in the products is a fluorinated greenhouse gas listed in Regulation (EU) No 517/2014.
・SEER/SCOP are based on EN14825:2016 and Commission regulation (EU) No.2016/2281. Temperature conditions for calculating SCOP are based on "Average climate".
・The above values are combination with Ceiling casse the 4way unit.

NOTES

Before starting use

Heating performance
The heating performance values (kW) described in the catalogue are the values obtained by operating at an outdoor temperature of 7℃ and indoor temperature of 20℃ as set forth in the ISO Standards. Heating performance is reduced as the temperature drops, If the outdoor temperature is too low and the heating performance is insufficient, use other heating appliances as well.

Indication of sound values
The sound values are the values (A scale) measured in a chamber such as an anechoic chamber following the ISO Standards. In the actual installation state, the value is normally larger than the values given in the catalogue due to the effect of surrounding noise and echo. Take this into consideration when installing.

Use in oil atmosphere
Avoid installing this unit in an atmosphere where oil scatters or builds up, such as in a kitchen or machine factory.
If the oil adheres to the heat exchanger, the heat exchanging performance will drop, mist may be generated, and the synthetic resin parts may deform and break.

Use in acidic or alkaline atmosphere
If this unit is used in acidic atmosphere such as hot spring areas having high level of sulfuric gases or in alkaline atmosphere including ammonia or calcium chloride, places where the exhaust of the heat exchanger is sucked in, or at coastal areas where the unit is subject to salt breezes, the outer plate or heat exchanger, etc., will corrode. Please ask a dealer or specialist when you use an air conditioner in places differing from a general atmosphere.

Use in places with high ceilings
If the ceiling is high, install a circulator to improve the heat and air flow distribution when heating.

Refrigerant leakage
The refrigerant (R32, R410A) used for air conditioner is non-toxic and in its original state.
However, in consideration of a state where the refrigerant leaks into the room, measures against refrigerant leaks must be taken in small rooms where the tolerable level could be exceeded. Take measures by installing ventilation devices, etc.

Use in snowy areas
Take the following measures when installing the outdoor unit in snowy areas.

·Snow prevention
Install a snow-prevention hood so that the snow does not obstruct the air intake port or enter and freeze in the outdoor unit.

·Snow piling
In areas with heavy snow fall, the piled snow could block the air intake port. In this case, a frame that is 50cm or higher than the estimated snow fall must be installed underneath the outdoor unit.

Automatic defrosting device
If the temperature is low, and the humidity is high, frost will stick to the heat exchanger of the outdoor unit. If continued to use, the heating performance will drop.
The "Automatic defrosting device" will function to remove this frost.
After heating for approx, three to ten minutes, it will stop, and the frost will be removed. After defrosting, hot air will be blown again.

Servicing
After the air conditioner has been used for several seasons, dirt will build up in the air conditioner causing the performance to drop. In addition to regular servicing, a maintenance contract by a specialist is recommended.

Safety Precautions

Air conditioner usage target
The air conditioner described in this catalogue is a dedicated cooling/ heating device for human use.
Do not use it for special applications such as the storage of food items, animals or plants, precision devices or valuable art, etc.
This could cause the quality of the items to drop, etc.
Do not use this for cooling vehicles or ships. Water leakage or current leaks could occur.

Before use
Always read the "User's Manual" thoroughly before starting use.

Installation
Always commission the installation to a dealer or specialist. Improper installation will lead to water leakage, electric shocks and fires.
Make sure that the outdoor unit is stable in installation. Fix the unit to stable base.

Usage place
Do not install in places where combustible gas could leak or where there are sparks. Installation in a place where combustible gas could be generated, flow or accumulate, or places containing carbon fibers could lead to fires.

Mitsubishi Heavy Industries Thermal Systems, Ltd.
(Wholly-owned subsidiary of MITSUBISHI HEAVY INDUSTRIES, LTD.)

2-3 Marunouchi 3-chome, Chiyoda-ku, Tokyo 100-8332, Japan
https://www.mhi-mth.co.jp/en/

Our factories are ISO9001 and ISO14001 certified.

Certified ISO 9001

Certificate Number : JQA-0709

Certificate Number : 4333-2007-AQ-RGC-RvA

Certified ISO 14001

Certificate Number : YKA4005636

Certificate number : 02117E10160R0M

23KX01E August 2022 F

Because of our policy of continuous improvement, we reserve the right to make changes in all specifications without notice.

Edited in Japan